HEIN-WERNER AUTOMOTIVE®

Service Jacks

Operating Instructions & Parts Manual

Model Number	Capacity
HW93642	2 Ton
HW93652	3 Ton

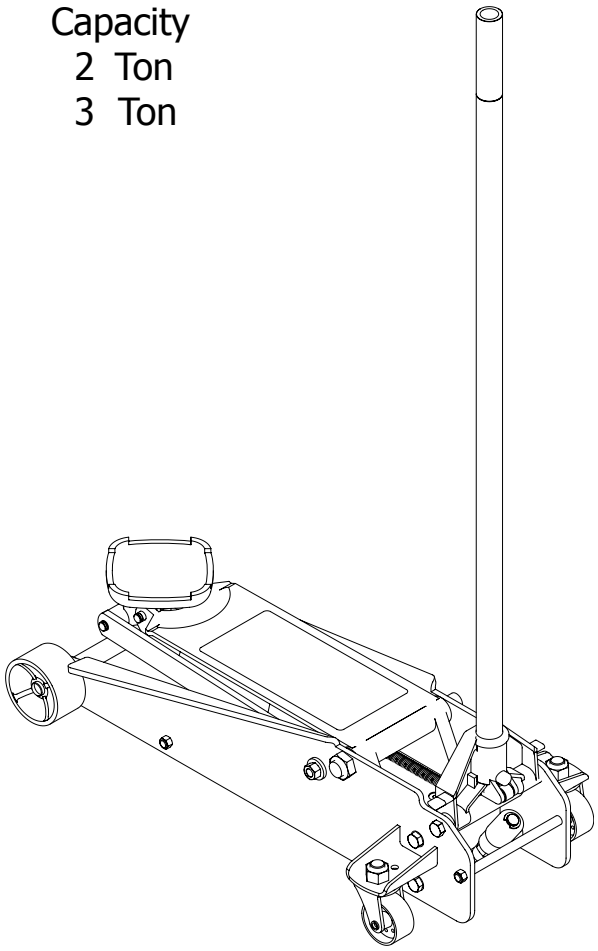

Assembled in the US with US and Global Components

This is the safety alert symbol. It is used to alert you to potential personal injury hazards. Obey all safety messages that follow this symbol to avoid possible injury or death.

SFA Companies
10939 N. Pomona Ave. Kansas City, MO 64153
customerservices@heinwerner-automotive.com

Read this manual and follow all the Safety Rules and Operating Instructions before using this product.

HW93642-M0_022016

SAFETY AND GENERAL INFORMATION

Save these instructions. For your safety *read, understand, and follow* the information provided with and on this jack. The owner and operator of this equipment shall have an understanding of this jack and safe operating procedures before attempting to use. The owner and operator shall be aware that use and repair of this product may require special skills and knowledge. Instructions and safety information shall be conveyed in the operator's native language before use of this jack is authorized. If any doubt exists as to the safe and proper use of this jack, remove from service immediately.

Inspect before each use. Do not use if broken, bent, cracked, or damaged parts (including labels) are noted. Any jack that appears damaged in any way, operates abnormally or is missing parts, shall be removed from service immediately and the manufacturer notified. If you suspect that the jack was subjected to a shock load (a load dropped suddenly, unexpectedly upon it), immediately discontinue use until the jack has been checked by a factory authorized service center (contact distributor or manufacturer for list of Authorized Service Centers). It is recommended that an annual inspection be done by qualified personnel. Replace worn or damaged parts with Hein-Werner Authorized Replacement Parts only. Labels and owner's manuals are available from manufacturer.

PRODUCT DESCRIPTION

Hein-Werner Hydraulic Service Jacks are designed to lift, not support, rated capacity loads consisting of one end of a vehicle. Immediately after lifting, the load must be supported by a pair of appropriately rated jack stands.

⚠ **WARNING:** *Never use this jack as a stand alone device. After lifting, immediately support the lifted vehicle with a pair of appropriately rated vehicle stands.*

SPECIFICATIONS

Model	Capacity	Min. Height	Max. Height	Jack Size (l x w)
HW93642	2 Ton	4-1/2"	20-1/4"	28-1/2" x 14-7/8"
HW93652	3 Ton	5"	23-1/2"	31-1/2" x 15-1/2"

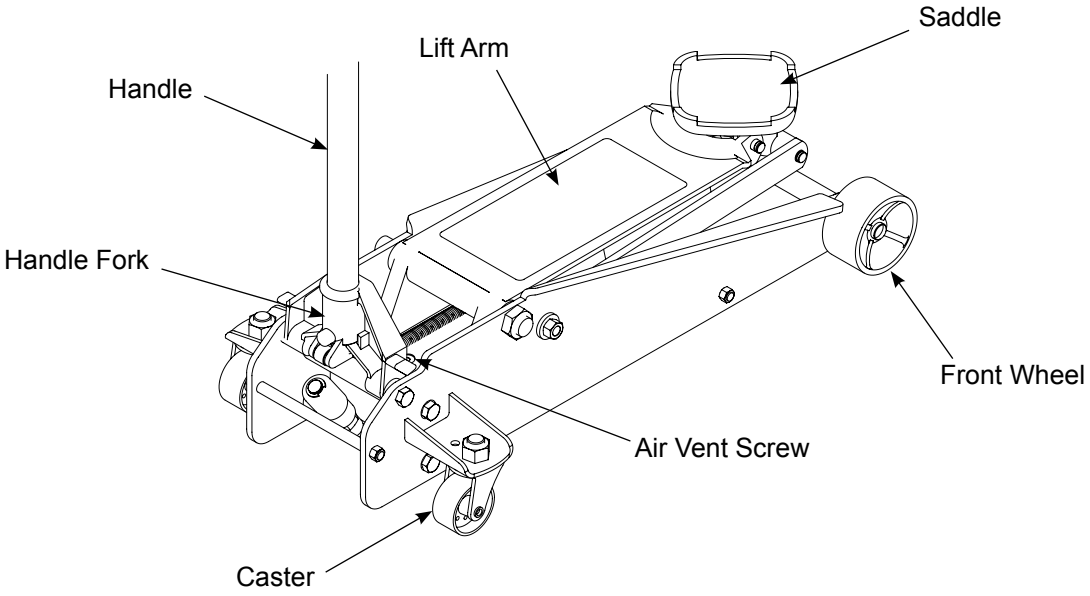

Figure 1 - Typical Service Jack Components

⚠ WARNING

- Study, understand, and follow all instructions before operating this device.
- Do not exceed rated capacity.
- Use only on hard, level surface.
- Lifting device only. Immediately after lifting, support the vehicle with appropriate means.
- Do not move or dolly the vehicle while on the jack.
- Lift only on areas of the vehicle as specified by the vehicle manufacturer.
- No alterations shall be made to this product.
- Failure to heed these markings may result in personal injury and/or property damage.

⚠ WARNING

- Read, understand and follow the instructions before using the appliance.
- The operating manual and safety information should be communicated in the native language of the operator before use.
- Failure to do so may cuase personal injury and/ or property damage.

PREPARATION (ref. Figure 1)

Before Use

1. Verify that the product and application are compatible, if in doubt contact Hein-Werner technical service.
2. Before use, read the operator's manual completely and familiarize yourself thoroughly with the product, its components and recognize the potential hazards associated with its use.
3. Insert handle into handle fork. Tighten bolt on handle fork to prevent accidental removal of handle while in use.

⚠ **WARNING:** *Do not lift or carry jack by handle. Handle could dislodge and jack fall, resulting in possible injury or property damage.*

4. To familiarize yourself with the basic operation of the jack, locate and turn the release valve (handle):
   a. *Clockwise* until firm resistance is felt to further turning. This is the 'CLOSED' release valve position used when raising the load.
   b. *Counter-clockwise*, but no more than 1/2 full turn from the closed position. This is the 'OPEN' release valve position used to lower the load.
5. With saddle fully lowered, and release valve closed, pump the operating handle. If lift arm responds immediately, jack is ready for use. If jack does not respond, follow **Bleeding/Venting Trapped Air** procedure below.
6. Jack should roll freely. Raise and lower the unloaded saddle throughout the lift range before putting into service to ensure the pump and release valve operate smoothly.
7. Replace worn or damaged parts and assemblies with Hein-Werner Replacement Parts only. Lubricate as instructed in Maintenance Section.

Bleeding/Venting Trapped Air

With the Release Valve in the OPEN position (4b above) and Saddle fully lowered, locate and remove the Oil Filler Screw. Pump Handle 6 to 8 full strokes. This will help release any pressurized air which may be trapped within the reservoir. Check oil level and reinstall Oil Filler Screw.

OPERATION

Lifting

⚠ **WARNING:** *Lift only on areas of the vehicle as specified by the vehicle manufacturer.*

1. Follow the vehicle manufacturer's recommended guidelines for lifting. Engage the emergency brake and chock each unlifted wheel in both directions to prevent inadvertent vehicle movement.
2. Locate and close the release valve by turning the handle clockwise until firm resistance is felt.
3. Refer to the vehicle manufacturer owner's manual to locate approved lifting points on the vehicle. Center jack saddle under lift point.
4. Verify lift point then use handle pump to contact lift point. To lift, pump handle until load reaches desired height.
5. Transfer the load to appropriately rated jack stands.

⚠ **WARNING:** *Never work on, under or around a load supported only by a hydraulic jack.*

⚠ **WARNING:** *Overloading may cause hydraulic system failure and sudden loss of load.*

Lowering

⚠ **WARNING:** *Clear all tools and personnel before lowering vehicle. The further release valve (handle) is turned counter-clockwise, the faster the load will descend. Maintain control of the speed at which the load lowers at all times.*

1. Raise load high enough to clear the jack stands.
2. Remove jack stands, carefully.
3. Slowly turn the release valve (handle) counter-clockwise, but no more than 1/2 full turn. *If the load fails to lower*:
   a. Use another jack to raise the vehicle high enough to reinstall jack stands.
   b. Remove the malfunctioning jack and then repeat steps 1 and 2 to remove the jack stands.
   c. Using the functioning jack, lower the vehicle.
4. After removing jack from under the load, push saddle down to reduce ram exposure to rust and contamination.

MAINTENANCE

NOTICE: *Use only quality grade hydraulic jack oil. Avoid mixing different types of fluid and NEVER use brake fluid, turbine oil, transmission fluid, motor oil or glycerin. Improper fluid can cause failure of the jack and the potential for sudden and immediate loss of load. Hein-Werner hydraulic jack oil HW93291 or equivalent is recommended.*

Adding oil
1. Lower saddle fully.
2. Set jack in its upright, level position.
3. Locate and remove air vent screw.
4. Fill with hydraulic fluid until slightly above the inner cylinder as seen from the air vent screw hole.
5. Reinstall the air vent screw.

Changing oil
For best performance and longest life, completely replace hydraulic fluid at least once a year.
1. Lower saddle fully.
2. Remove the air vent screw.
3. Lay the jack on its side and drain the fluid into a suitable container.

NOTICE: *Dispose of hydraulic fluid in accordance with local environmental regulations.*

4. Fill with hydraulic fluid until slightly above the inner cylinder as seen from the air vent screw hole.
5. Reinstall the air vent screw.

Lubrication
A periodic coating of light lubricating oil to pivot points, axles and hinges will help to prevent rust and assure that wheels, casters and pump assemblies move freely.

Cleaning
Periodically check pump piston and ram for signs of rust or corrosion. Clean as needed and wipe with an oily cloth.

NOTICE: *Never use sandpaper or abrasive material on these surfaces.*

Storage
Lower the saddle to its lowest position when not in use.

TROUBLESHOOTING

Symptom	Possible Causes	Corrective Action
Jack will not lift load	• Release valve not tightly closed • Overload condition	• Ensure release valve tightly closed • Remedy overload condition
Jack bleeds off after lift	• Release valve not tightly closed • Hydraulic unit malfunction	• Ensure release valve tightly closed • Discontinue use, contact Hein-Werner Technical Service
Jack will not lower after unloading	• Reservoir overfilled • Linkages binding	• Drain fluid to proper level • Clean and lubricate moving parts
Poor lift performance	• Air trapped in system	• Follow **Bleeding/Venting Trapped Air** procedure on page 3
Jack will not lift to full extension	• Fluid level low	• Ensure proper fluid level

REPLACEMENT PARTS (ref. pages 6 & 7)

Not all components of the jack are replacement items, but are illustrated as a convenient reference of location and position in the assembly sequence. When ordering parts, give model number, part number and parts description. Call or write for current pricing: Hein-Werner Customer Support, 10939 N. Pomona Ave. Kansas City, MO 64153. Phone: (816) 891-6390; E-mail: customerservices@heinwerner-automotive.com

Replacement Parts Illustration for Model HW93642 & HW93652 (refer to parts list on page 7)

Frame Section

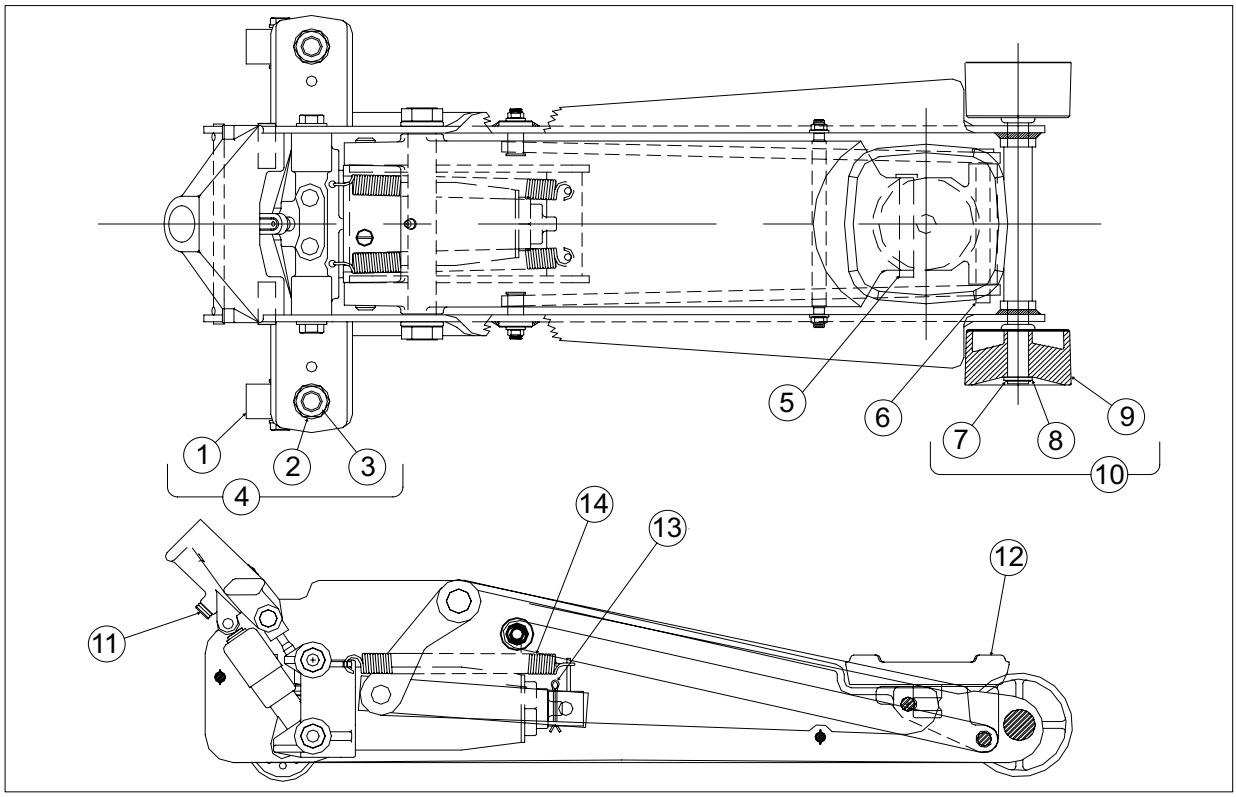

Hydraulic Unit Cross Section

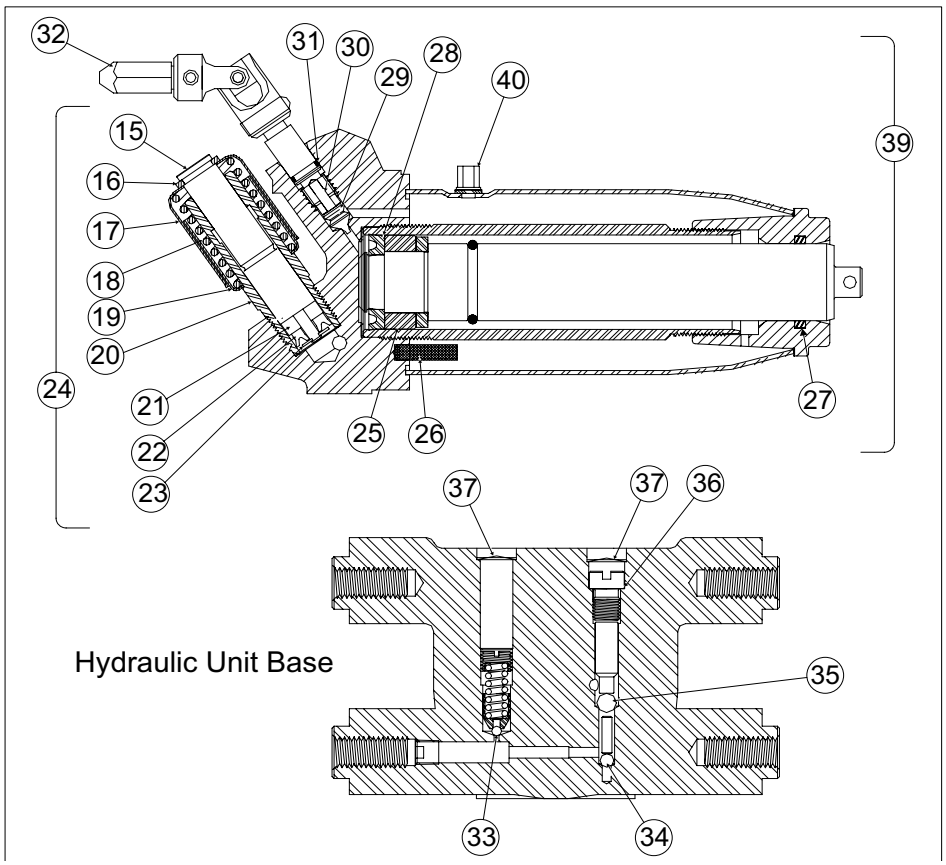

Handle Assembly

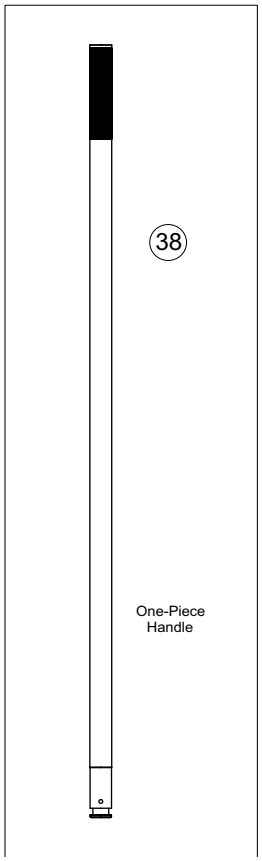

Figure 2 - Parts Illustration for Model HW93642 & HW93652

Replacement Parts List for Model HW93642 & HW93652 (refer to parts drawing on page 6)

Item	Part Number HW93642	Part Number HW93652	Description	Qty
1	231583		Caster, 2.5 x 1.25	2
2	201115		Lock Washer, 3/4	2
3	219451		Hex Nut, 3/4-10	2
4	231584		Caster Assembly (includes items 1 - 3)	2
5	201806		Retaining Ring	1
6	201805		Retaining Ring	1
7	214557		Retaining Ring	2
8	204324		Flat Washer, 3/4	2
9	234678		Wheel, 3.75 x 2	2
10	234677		Front Wheel Assy (includes items 7 - 9)	2
11	234956		Hex Head Bolt, 3/8-24	1
12	239304	239312	Saddle	1
13	221408		Cotter Pin, 1/8	1
14	243618		Return Spring	2
15	N/A		Pump Piston	1
16*	N/A		Retaining Ring	1
17	N/A		Pump Sleeve	1
18	N/A		Spring	1
19	N/A		Pump Sleeve	1
20	N/A		Pump Cylinder	1
21*	N/A		Back-up Ring	1
22*	N/A		U-Cup	1
23	N/A		Retaining Ring	1
24	890-021-666		Pump Assembly (includes items 14 - 21)	1
25*	230301		Heel Plate	1
26*	221318		Screen	1
27*	221748		Quad Ring	1
28*	228256		U-cup	1
29*	218043		Release Valve	1
30*	233917		Plastic Spring	1
31*	216143		Gland O-ring	1
32	248731		Universal Assembly	1
33*	203196		Ball, 5/32 dia	1
34*	203198		Ball, 7/32 dia	1
35*	203201		Ball, 5/16 dia	1
36*	204842		Gasket	1
37*	201733		Plug	2
38*	234957	234961	1 pc. Handle Assembly	1
39*	248721	890-005-010	Power Unit	1
40	6420-10000-000		Air Vent Screw Assembly	1
*	248949		Repair Kit for Hydraulic Unit	-

TWO YEAR LIMITED WARRANTY

For a period of two (2) years from date of purchase, SFA Companies will repair or replace, at its option, without charge, any of its products which fails due to a defect in material or workmanship under normal usage. This limited warranty is a consumer's exclusive remedy.

Performance of any obligation under this warranty may be obtained by returning the warranted product, freight prepaid, to SFA Companies Warranty Service Department, 10939 N. Pomona Ave., Kansas City, MO 64153.
Except where such limitations and exclusions are specifically prohibited by applicable law:

(1) THE CONSUMER'S SOLE AND EXCLUSIVE REMEDY SHALL BE THE REPAIR OR REPLACEMENT OF DEFECTIVE PRODUCTS AS DESCRIBED ABOVE
(2) SFA COMPANIES SHALL NOT BE LIABLE FOR ANY CONSEQUENTIAL OR INCIDENTAL DAMAGE OR LOSS WHATSOEVER.
(3) ANY IMPLIED WARRANTIES, INCLUDING WITHOUT LIMITATION THE IMPLIED WARRANTIES OF MERCHANTABILITY AND FITNESS FOR A PARTICULAR PURPOSE, SHALL BE LIMITED TO TWO YEARS, OTHERWISE THE REPAIR, REPLACEMENT OR REFUND AS PROVIDED UNDER THIS EXPRESS LIMITED WARRANTY IS THE EXCLUSIVE REMEDY OF THE CONSUMER, AND IS PROVIDED IN LIEU OF ALL OTHER WARRANTIES, EXPRESS OR IMPLIED.
(4) ANY MODIFICATION, ALTERATION, ABUSE, UNAUTHORIZED SERVICE OR ORNAMENTAL DESIGN VOIDS THIS WARRANTY AND IS NOT COVERED BY THIS WARRANTY.

Some states do not allow limitations on how long an implied warranty lasts, so the above limitation may not apply to you. Some states do not allow the exclusion or limitation of incidental or consequential damages, so the above limitation or exclusion may not apply to you. This warranty gives you specific legal rights, and you may also have other rights which vary from state to state.

SFA Companies
10939 N. Pomona Ave. Kansas City, MO 64153
816-891-6390
customerservices@heinwerner-automotive.com