J10125-M2 rev 07/08

Hydraulic Bottle Jack Instruction Manual

MODELS:	**J10125**	**- 12 Ton Capacity**
	J10129	**- 12 Ton Capacity**
	J10205	**- 20 Ton Capacity**
	J10209	**- 20 Ton Capacity**
	J10300	**- 30 Ton Capacity**

SFA Companies 10939 N. Pomona Ave. Kansas City, MO 64153
Tel: 888-332-6419 - Fax: 816-891-6599
E-mail: sales@bvahydraulics.com Website: www.bvahydraulics.com

This is the safety alert symbol. It is used to alert you to potential personal injury hazards. Obey all safety messages that follow this symbol to avoid possible injury or death.

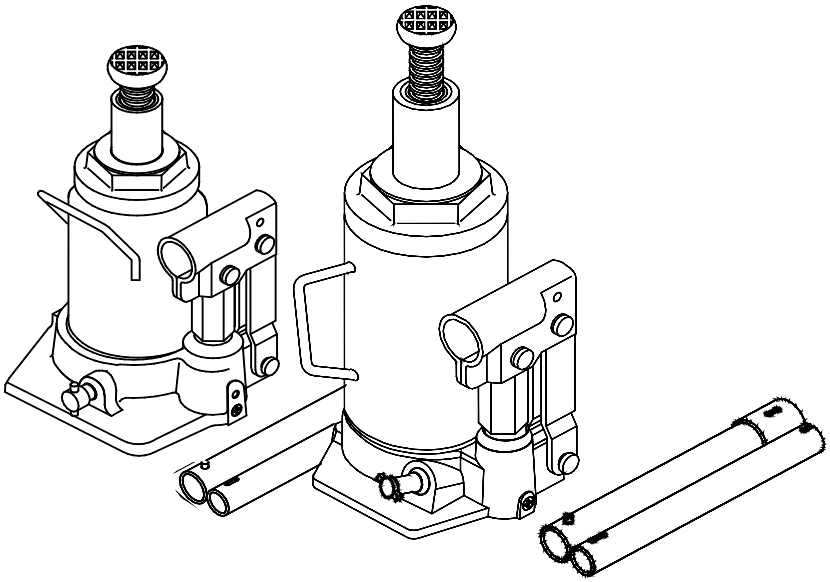

US Patent No. 5,946,912

ADVERTENCIA

- Leer, comprender, y seguir las instrucciónes antes de utilizar el aparato.
- El manual de instrucciónes y la información de seguridad deben estar comunicado en lengua del operador antes del uso.
- No seguir estas indicaciónes puede causar daños personales o materiales.

WARNING

To avoid **crushing and related injuries**:

NEVER work on, under or around a load supported only by a hydraulic jack. **ALWAYS** use adequately rated jack stands **immediately** after lifting.

Read this manual and follow all the Safety Rules and Operating Instructions before using this product.

Printed in China

SAFETY and GENERAL INFORMATION

Save these instructions. For your safety, read, understand, and follow the information provided with and on this jack before using. The owner and operator of this equipment shall have an understanding of this jack and safe operating procedures before attempting to use. The owner and operator shall be aware that use and repair of this product may require special skills and knowledge. Instructions and safety information shall be conveyed in the operator's native language before use of this jack is authorized. If any doubt exists as to the safe and proper use of this jack, remove from service immediately.

Inspect before each use. Do not use if broken, bent, cracked or damaged parts are noted. Any jack that appears damaged in any way, or operates abnormally shall be removed from service immediately. If the jack has been or suspected to have been subjected to a shock load (a load dropped suddenly, unexpectedly upon it), immediately discontinue use until jack has been checked by a BVA Hydraulic authorized service center (contact distributor or manufacturer for list of authorized service centers). It is recommended that an annual inspection be done by qualified personnel. Labels and Operator's Manuals are available from

PRODUCT DESCRIPTION

BVA Hydraulics Bottle Jacks are designed to lift, not support, rated capacity loads consisting of one end of a vehicle. Immediately after lifting, the load must be supported by a pair of appropriately rated jack stands.

***Never** use hydraulic jack as a stand alone device. After lifting, **immediately** support the lifted load with a pair of appropriately rated jack stands. **Never** place any portion of your body under the load while lifting or lowering the load.*

PREPARATION

Before Use

1. Verify that the product and application are compatible, if in doubt call BVA Hydraulics Technical Service (888) 332-6419.
2. Before using this product, read the operator's manual completely and familiarize yourself thoroughly with the product, its components and recognize the hazards associated with its use.
3. Assemble handle, ensure spring clips align with slots.
4. To familiarize yourself with basic operation, use the notched end of provided handle to engage and turn the release valve:
   a. Clockwise until firm resistance is felt to further turning. This is the '**CLOSED**' release valve position used to **raise** the ram plunger.
   b. Counter-clockwise, but no more than 1 turn from the closed position. This is the '**OPEN**' release valve position used to **lower** the ram plunger.
5. With ram fully retracted, locate and remove the oil filler plug/screw. Insert the handle into the handle sleeve, then pump 6 to 8 strokes. Ensure the oil level is just below the oil filler hole. Reinstall the oil filler plug/screw.
6. Check that the pump operates smoothly and that the extension screw will thread up/down easily before putting into service. Replace worn or damaged parts and assemblies with BVA Hydraulics authorized replacement parts only.

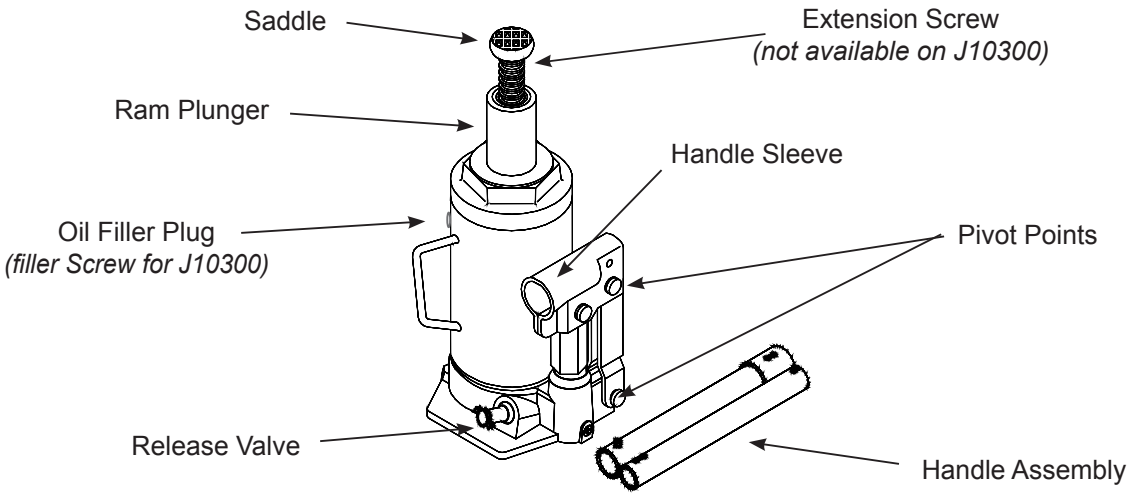

Figure 1 - Typical Bottle Jack Nomenclature

⚠ WARNING

- **Study, understand, and follow** all printed materials provided with/on this product before use.
- **Do not** exceed rated capacity.
- **This is a lifting device only!**
- **Immediately** after lifting, support the load with **a pair** of appropriately rated jack stands.
- Use only on hard, level surface.
- Do not use adapters or accessories that are not provided initially.
- Lift only on areas of the vehicle as specified by the vehicle manufacturer.
- No alterations shall be made to this product.
- **Failure to heed** these markings may **result** in **personal injury and/or property damage**.

⚠ WARNING

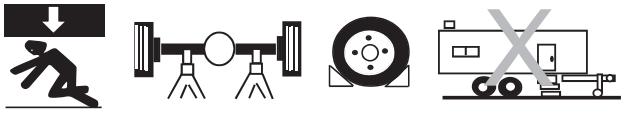

To avoid **crushing and related injuries**:

- **Never** work on, under or around a load supported only by hydraulic jack.
- **Always** use adequately rated jack stands.
- Chock each unlifted tire in both directions.
- **Do not** use this device to lift, level, lower, support nor move a house, mobile home, travel trailer, camper or any building structure.
- **Be alert** and **sober** when using this product. Do not operate under the influence of drugs or alcohol.

⚠ *Be sure all tools and personnel are clear before lowering load. Only attachments and/or adapters supplied by the manufacturer shall be used. Lift only on areas of the vehicle as specified by the vehicle manufacturer.*

OPERATION

Raising the Ram Plunger

1. Assemble handle, ensure that spring clips align with slots.
2. Place vehicle in the park, with emergency brake on and wheel securely chocked to prevent inadvertent vehicle movement.
3. Locate and close release valve by turning handle clockwise until firm resistance is felt to further thread engagement.
4. Verify lift point, center jack saddle under lift point.
5. Insert the handle into the handle sleeve, then pump in order to raise saddle to contact lift point. To lift, continue pumping until load reaches desired height.
6. **Immediately** secure lifted load with appropriately rated jack stands.

⚠ *Use only the handle provided by jack manufacturer. The handle provided with this jack will safely engage the release valve. If handle is worn, operates abnormally, or will not positively engage the release valve, **STOP**, discontinue use of the jack until a factory replacement handle can be acquired.*

⚠ *Do not use an extender on the operating handle.*

Lowering

⚠ *Make certain that all personnel are clear of the load before lowering. **Control** the rate of descent of the load **at all times**. The **more** you open the release valve, the **faster** the load descends.*

1. Raise load high enough to clear the jack stands, then carefully remove jack stands (**always** used in pairs).
2. Slowly turn the handle counter-clockwise, but no more than 1 turn. <u>If the load fails to lower</u>:
   a. Use another jack to raise the vehicle high enough to reinstall jack stands.
   b. Remove the affected jack and then the stands.
   c. Lower the load by turning the release valve counter-clockwise, but no more than 1 turn.
3. After removing jack from under the load, push ram and handle sleeve down to reduce exposure to rust and contamination.

SPECIFICATIONS

Model	Capacity	Base Size (L x W)	Min. Height	Max. Height	Extension Screw	Hydraulic Lift
J10125	12 Ton	5-1/4" x 5-1/8"	9-3/8"	18-1/2"	3-1/8"	6"
J10129			6"	10-3/4"	1-5/8"	3-1/8"
J10205	20 Ton	6-1/4" x 5-7/8"	9-1/2"	18-5/8"	3-1/8"	6"
J10209			6-1/2"	11-1/4"	1-5/8"	3-1/8"
J10300	30 Ton	8-1/8" x 6-7/8"	11"	18"	N/A	7"

MAINTENANCE

Important: Use only good grade hydraulic jack oil. NEVER use brake fluid, turbine oil, transmission fluid, motor oil or glycerin. Improper fluid can cause premature failure of the jack and the potential for sudden and immediate loss of load. We recommend Mobil DTE 13M or equivalent.

Adding oil

1. With saddle fully lowered and pump piston fully depressed, set jack in its upright, level position. Remove oil filler screw/plug.
2. Fill with oil until just below the rim of the oil filler hole. Reinstall the oil filler screw/plug.

Changing oil

For best performance and longest life, replace the complete fluid supply at least once per year.

1. With saddle fully lowered and pump piston fully depressed, remove the oil filler screw/plug.
2. Lay the jack on its side and drain the fluid into a suitable container.

Note: Dispose of hydraulic oil in accordance with local regulations.

3. Fill with oil until just below the rim of the oil filler hole. Reinstall the oil filler screw/plug.

Lubrication

1. A periodic coating of light lubricating oil to pivot points, axles and hinges will help to prevent rust and assure that pump assemblies move freely.

Cleaning

Periodically check the pump piston and ram for signs of rust or corrosion. Clean as needed and wipe with an oily cloth.

Paint contains lead!
***DO NOT** sand or grind painted surface!*

WARNING

- The paint on this product contains lead, a chemical known in the State of California to cause cancer, birth defects and other reproductive harm.
- Do not ingest paint chips and keep product away from children.
- Wash hands after each use.

Storage

When not in use, store the jack with pump piston and ram fully retracted and air supply disconnected.

Replacement Parts List for Models J10125, J10129, J10205 & J10209

Item	Part# for Models:		Descripttion	Qty
	J10125 & J10129	J10205 & J10209		
1	F36100-0001		Oil Filler Plug	1
2	B21207-0002		Handle Assembly	1
3	B80200-0001		Release Valve	1
-	B21207-0001	B22007-0000	*Repair Kit *(includes all soft seals, oil filler plug & release valve assembly)*	-
-	J10125-M2		OIPM	-
-	J10125-L0		Label J10125	
-	J10205-L0		Label J10205	
-	J10129-L0		Label J10129	
-	J10209-L0		Label J10209	

*Repair Kits require special skill, training, and equipment to repair. Installation must be done by Authorized Service Center. Contact BVA for list of Authorized Service Centers.

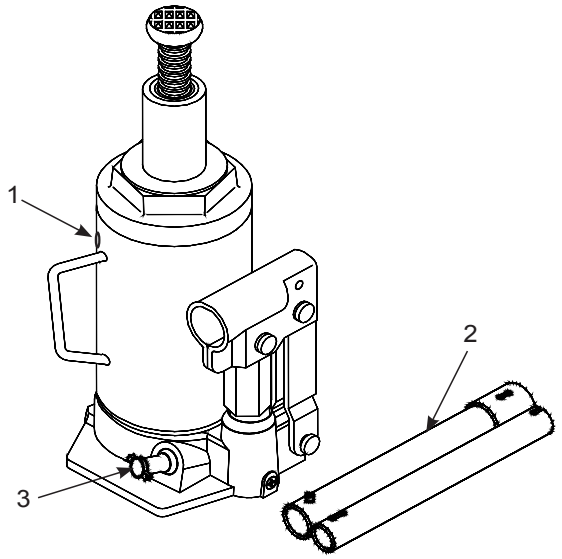

Figure 2 - Illustration for Models J10125 & J10205

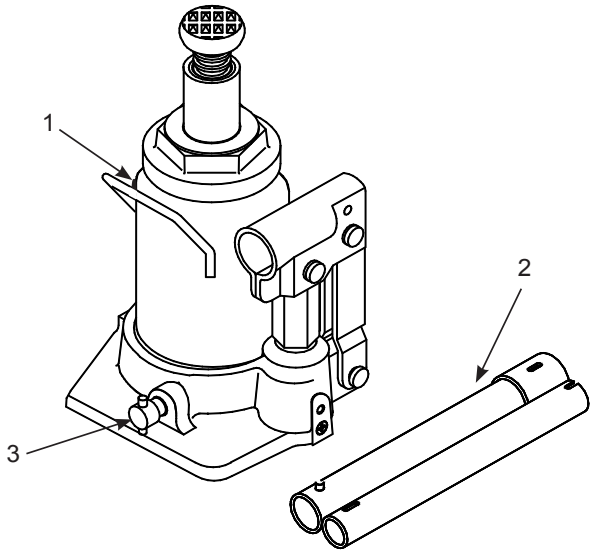

Figure 3 - Illustration for Models J10129 & J10209

Replacement Parts List for Model J10300

Item	Part# for J10300	Description	Qty
1	G62S-03301-000	Oil Filler Screw	1
2	B300-17000-000	Handle Assembly	1
3	BT02-17100-000	Release Valve	1
-	B3000S-034	*Repair Kit *(includes all soft seals)*	-
-	J10125-M2	OIPM	-
-	J10300-L0	Label	-

*Repair Kits require special skill, training, and equipment to repair. Installation must be done by Authorized Service Center. Contact BVA for list of Authorized Service Centers.

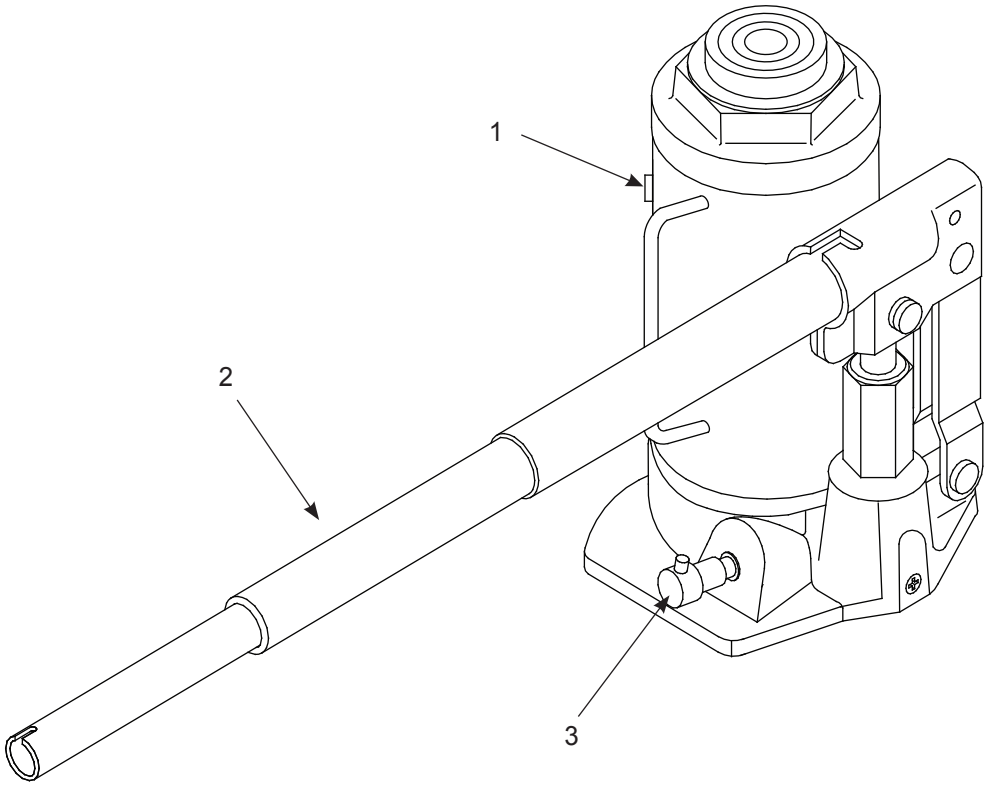

Figure 4 - Illustration for Model J10300

TROUBLESHOOTING

Symptom	Possible Causes	Corrective Action
Jack will not lift load	• Release valve not tightly closed • Overload condition • Air pressure inadequate	• Ensure release valve tightly closed • Remedy overload condition • Ensure adequate air pressure
Jack will lift, but not maintain pressure	• Release valve not tightly closed • Overload condition • Hydraulic unit malfunction	• Ensure release valve tightly closed • Remedy overload condition • Contact BVA Tech. Service
Jack will not lower after unloading	• Reservoir overfilled	• Ensure load is removed, then drain fluid to proper level
Poor lift performance	• Fluid level low • Air trapped in system	• Ensure proper fluid level • With ram fully retracted, remove oil filler plug/screw to let pressurized air escape, then reinstall oil filler plug/screw
Will not lift to full extension	• Fluid level low	• Ensure proper fluid level

LIMITED LIFETIME WARRANTY

BVA Hydraulics®, represented in the United States by SFA Companies [“SFA”] warrants this product to be free from defects in material and workmanship for the life of the product as long as the original purchaser owns the product. The warranty is non-transferable and is subject to the terms, exclusions, and limitations described below:

- Damaged components, including but not limited to bent rams, dented or crushed cylinder walls, broken welds or couplers as well as worn out seals, o-rings and springs are the result of misuse and not covered by warranty and BVA Hydraulics will not provide any warranty credit for such damaged components.
- This warranty does not cover ordinary wear and tear, overloading, alterations (including repairs or attempted repairs not performed by BVA Hydraulics or one of its authorized personnel), improper fluid use, or use of the product in any manner for which the product was not intended or the use of which is not in accordance with the instructions or warnings provided with the product.
- In the unlikely event that a BVA Hydraulics product fails due to material defect in workmanship, you may contact SFA for disposition. In such cases, the customer’s sole and exclusive remedy for any breach or alleged breach of warranty is limited to the repair or replacement of the defective product.
- Under no circumstances is BVA Hydraulics liable for any consequential or incidental damage or loss whatsoever.
- THIS WARRANTY IS LIMITED TO NEW PRODUCTS SOLD THROUGH AUTHORIZED DISTRIBUTORS AND OTHER CHANNELS DESIGNATED BY BVA HYDRAULICS. NO AGENT, EMPLOYEE OR OTHER REPRESENTATIVE OF BVA HYDRAULICS IS AUTHORIZED TO MODIFY THIS WARRANTY.
- THE FOREGOING IS EXCLUSIVE AND IS IN LIEU OF ALL OTHER EXPRESS AND IMPLIED WARRANTIES, INCLUDING BUT NOT LIMITED TO THE IMPLIED WARRANTIES OF MERCHANTABILITY AND FOR A FITNESS FOR A PARTICULAR PURPOSE.
- Components not manufactured by BVA Hydraulics including certain motor systems, gasoline engines, and others are not covered by this warranty and instead are covered by the manufacturer’s separate manufacturer’s warranty provided in the package.
- BVA Hydraulics’ liability in all cases is limited to, and will not exceed the purchase price paid for the product.

SFA Companies
10939 N. Pomona Ave. Kansas City, MO 64153
Tel: 888-332-6419
E-mail: sales@bvahydraulics.com

Note Page

Contact:
SFA Companies
10939 N. Pomona Ave. Kansas City, MO 64153, U.S.A.
Tel:(888)332-6419 Fax:(816)891-6599
E-Mail:sales@bvahydraulics.com
BVA Website: http://www.bvahydraulics.com