Air Hydraulic Pumps Instruction Manual

MODELS: PA1500L & PA3801L

SFA Companies 10939 N. Pomona Ave. Kansas City, MO 64153
Tel: 888-332-6419 * Fax: 816-891-6599
E-mail: sales@bvahydraulics.com Website: www.bvahydraulics.com

This is the safety alert symbol. It is used to alert you to potential personal injury hazards. Obey all safety messages that follow this symbol to avoid possible injury or death.

Maximum Operating Pressure 10,000 PSI

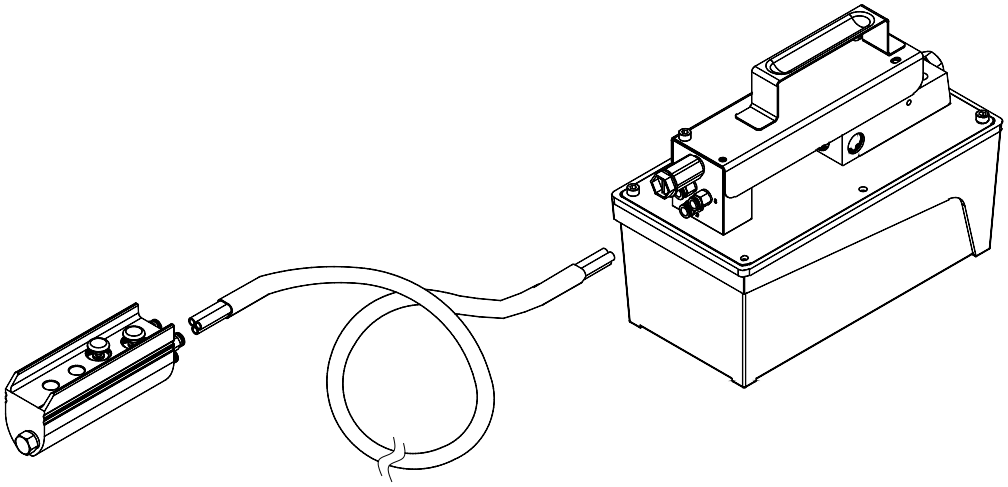

Printed in Taiwan

Save these instructions. For your safety, read and understand the information contained within. The owner and operator shall have an understanding of this product and safe operating procedures before attempting to use this product. Instructions and safety information shall be conveyed in the operator's native language before use of this product is authorized. Make certain that the operator thoroughly understands the inherent dangers associated with the use and misuse of the product. If any doubt exists as to the safe and proper use of this product as outlined in this factory authorized manual, remove from service immediately.

Inspect before each use. It is recommended that, prior to each use, an inspection be done by qualified personnel and that any missing or damaged parts, decals, warning/ safety labels or signs be replaced with BVA Hydraulics authorized replacement parts only. Any pump that appears to be damaged in any way, is worn, leaking or operates abnormally shall be removed from service immediately until such time as repairs can be made. Any pump that has been or suspected to have been subject to a shock load (a load dropped suddenly, causing the system pressure to exceed 10,000 PSI), shall be removed from service immediately until checked out by a BVA Hydraulics authorized service center. Owners and operators of this equipment shall be aware that the use and subsequent repair of this equipment may require special training and knowledge.

PRODUCT DESCRIPTION

BVA Hydraulics Air Hydraulic Pumps are engineered to meet most Industrial Standards for Performance and Safety. Its unique hydraulic circuit allows quick displacement of hydraulic fluid under no load conditions and easy pumping in loaded conditions. These air actuated pumps supply compressed hydraulic fluid to compatible applications i.e. rams, presses, spreaders, compactors and crimping machines, anywhere that 10,000 PSI of fluid pressure is needed. Special skill, knowledge and training may be required for a specific task and the product may not be suitable for all the jobs described above. Unsuitable applications would include applications that call for a device to move, level or support persons, animals, hazardous materials, mobile homes/ dwellings in general, mirrors and/or plate glass, and/or to connect/secure hatches, components, etc. between bulkheads. The user must ultimately make the decision regarding suitability of the product for any given task and assume the responsibility of safety for himself or herself and others in the work area.

⚠ **WARNING:** To reduce the risk of personal injury and/or property damage, ensure that the rated working pressure of each pressurized attachment be equal to or greater than the rated working pressure developed by the hydraulic pump.

⚠ Always check connections before using. Alteration of these products is strictly prohibited. Use only those adapters and attachments provided and approved by the manufacturer.

SPECIFICATIONS

Model Number	Usable Oil Capacity (in^3)	Rated Pressure (psi)	Output Flow Rate (in^3/min)		Inpur Air Pressure (psi)	Output Port Threads	Input Port Threads	Weight (lbs)
			No Load	Load				
PA1500L	91.5	10,000	61	10	110-175	3/8"-18NPT	1/4"-18NPT	19.4
PA3801L	231.9							30.4

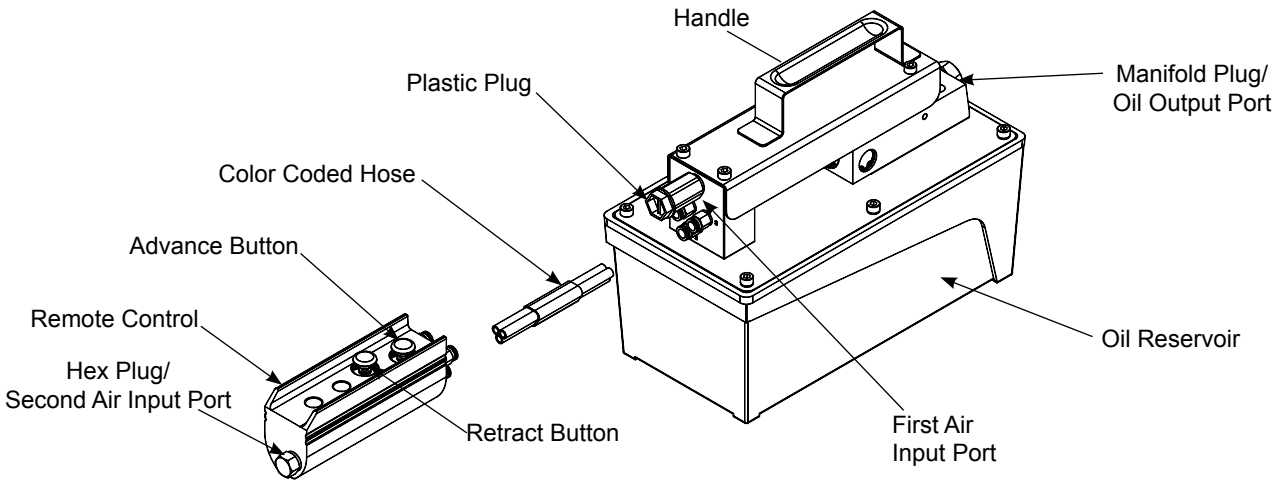

Figure 1 - Model PA1500L & PA3801L Components (PA1500L shown)

BEFORE USE

1. Before using this product, read the instruction manual completely and familiarize yourself thoroughly with the product and the hazards associated with its improper use.
2. Know your pump, its limitations and how it operates before attempting to use
3. Use Spare Parts List Illustration on pages 6 & 8 as reference of location and assembly.
4. Replace shipping plug (red color) with air vent plug (black color). Refer to #58 on parts illustration.

ASSEMBLY

To hook up pump with remote control:

1. Connect ***red*** hose into air line coupler number 1 on the pump and then put other end of red hose into corresponding slot on remote control
2. Connect ***purple*** hose into air line coupler number 2 on the pump and then put other end of purple hose into corresponding slot on remote control.
3. Connect ***white*** hose to air line coupler number 3 on the pump and then put other end of the white hose into corresponding slot on remote control.

Note: Always secure threaded port connections with non-hardening pipe thread compound. Tighten securely to prevent accidental removal of components while in use. Take care not to introduce compound into port orifices.

⚠ WARNING

- Study, understand, and follow all instructions provided with and on this device before use.
- All WARNING statements must be carefully observed to help prevent personal injury.
- No alteration shall be made to this device.
- Always wear protective gear when operating hydraulic equipment.
- Keep hydraulic equipment away from flames and heat. Hydraulic fluid can ignite and burn. Do not operate if leaks are detected.
- **Crush Hazard.** Keep hands and feet away from loading area. Avoid pinch points or crush points that can be created by the load, cylinder, or any equipment of system.
- To avoid crushing and related injuries: NEVER work on, under or around a lifted load before it is properly supported by appropriate mechanical means. Never rely on hydraulic pressure alone to support load.

HYDRAULIC PUMPS

- The user must be a qualified operator familiar with the correct operation, maintenance, and use of pumps. Lack of knowledge in any of these areas can lead to personal injury.
- Do not exceed rated capacity of the pump or any equipment in the system.
- Never attempt to lift a load weighing more than the capacity of the cylinder.
- Burst hazard exists if hose or connection pressure exceeds rated pressure.
- Do not subject the pump and its components to shock loads.
- Inspect pump, cylinder, hoses and connections before each use to prevent unsafe conditions from developing. Do not use if they are damaged, altered or in poor condition. Do not operate the system with bent or damaged coupler or damaged threads.
- Never hold or stand directly in line with any hydraulic connections while pressurizing.
- Use gauge or other load measuring instrument to verify load.
- Never attempt to disconnect hydraulic connections under pressure. Release all line pressure before disconnecting hoses.
- Use only approved accessories and approved hydraulic fluid.
- Never attach ANY component not authorized by manufacturer.
- Always ensure that the chosen application is stable to work on and around.
- Do not connect to application which can return more oil to the reservoir than the pump reservoir can hold.
- Do not connect pump to hydraulic system powered by another pump.
- This device is not suitable for use as support device! As the system load is lifted, use blocking and cribbing to guard against a falling load.
- All personnel must be clear before lowering load or depressurizing the system.
- Never try to disassemble a hydraulic cylinder, refer repairs to qualified, authorized personnel.

HYDRAULIC HOSES & FLUID TRANSMISSION LINES

- Avoid short runs of straight line tubing. Straight line runs do not provide for expansion and contraction due to pressure and/or temperature changes.
- Reduce stress in tube lines. Long tubing runs should be supported by brackets or clips. Before operating the pump, tighten all hose connections with proper tools. Do not overtighten. Connections should only be tightened securely and leak-free. Overtightening can cause premature thread failure or high pressure fittings to burst.
- Should a hydraulic hose ever rupture, burst or need to be disconnected, immediately shut off the pump and release all pressure. Never attempt to grasp a leaking pressurized hose with your hands. The force of escaping hydraulic fluid can inflict injury.
- Do not subject the hose to potential hazard such as fire, sharp objects, extreme heat or cold, or heavy impact.
- Do not allow the hose to kink, twist, curl, crush, cut or bend so tightly that the fluid flow within the hose is blocked or reduced. Periodically inspect the hose for wear.
- Do not pull, position or move setup by the hose.
- Hose material and coupler seals must be compatible with hydraulic fluid used. Hoses also must not come in contact with corrosive materials such as battery acid, creosote-impregnated objects and wet paint. Never paint a coupler or hose.
- FAILURE TO HEED THESE WARNINGS MAY RESULT IN PERSONAL INJURY AS WELL AS PROPERTY DAMAGE.

OPERATION

⚠ To reduce the risk of personal injury and/or property damage, hydraulic connections must be securely fastened before building pressure in the system. Release all system pressure before loosening any hydraulic connection in the system.

⚠ Always monitor pressure, load or position using suitable equipment. Pressure may be monitored by means of an optional manifold and gauge. Load may be monitored by means of a load cell and digital indicator. Correct application position can only be determined by the operator of the equipment.

1. Air connection: Remove plug from first or second air input port (refer to figure 1) and connect to adequate air supply. Install hex plug on unused air input port to prevent air leakage.
2. Hydraulic connection: Remove manifold plug from oil output port and connect to suitable application using 3/8 NPT connection.
3. To operate pump, press and hold on the advance button of the remote control until desired pressure, load or position is reached. Always monitor pressure, load or position using suitable equipment. Pressure may be monitored by means of an optional manifold and gauge (contact **BVA Hydraulics**). Load may be monitored by means of a load cell and digital indicator. Correct application position can only be determined by the operator of the equipment.
4. To retract application, simply press the retract button on the remote control.

Note: Both air input ports use a 1/4 NPT air nipple (not included). It is recommended to install an inline air filter and dryer upstream from the pump to provide clean, lubricated air. Contact BVA Hydraulics for necessary accessories.

MAINTENANCE

Important: Use only a good quality hydraulic jack fluid. **Never** use brake fluid, transmission fluid, turbine oil, motor oil, alcohol, glycerin etc. Use of other than good quality hydraulic oil will void warranty and damage the pump, hose, and application. We recommend Mobil DTE 13M or equivalent.

1. Inspect hoses and connections daily. Replace damaged components immediately with BVA Hydraulics replacement parts only.
2. Tighten connections as needed. Use non-hardening pipe thread compound when servicing connections.
3. Use only good quality hydraulic fluid. We recommend Mobil DTE 13M or equivalent.

Adding Hydraulic Fluid

1. Depressurize and disconnect hydraulic hose from application.
2. With pump in upright, horizontal position, remove the air vent plug located on the top plate of the reservoir.
3. Use a small funnel to fill reservoir to within 3/4" (19mm) of the opening.
4. Wipe up any spilled fluid and reinstall the air vent plug.

Changing Hydraulic Fluid

1. For best results, change fluid once a year.
2. Repeat step 2 on Adding Hydraulic Fluid, then pour used fluid into a sealable container.
3. Dispose of fluid in accordance with local regulations.
4. Fill with a good quality hydraulic jack oil as recommended above. Reinstall air vent plug.

Lubrication

When pump is operated on daily basis, the manufacturer recommends installing an inline oiler and air dryer. Use SAE grade oil (5W to 30W).

Storage

1. When not in use, depressurize and disconnect hydraulic hoses from application.
2. Wipe clean, thoroughly.
3. Store in clean, dry environment. Avoid temperature extremes.
4. For transportation or long storage, replace the air vent plug with shipping plug.
5. Shield pump with a protective cover.

TROUBLESHOOTING GUIDE

The following information is intended as an aid in determining if problem exists. Pumps should be repaired only by authorized BVA Service Center. For repair service, contact service center in your area.

Symptom	Possible Causes	Corrective Action
Application does not extend, move or respond to pressurized fluid	• Overload condition • Loose couplers • Faulty couplers • Pump malfunction • Inadequate air supply	• Remedy overload condition • Tighten couplers • Replace couplers • Contact service center • Ensure air source can dedicate 7.8 CFM @ 110~175 PSI
Application responds to pressurized fluid, but system does not maintain pressure	• Overload condition • Pump or valve malfunction • Application/connection leaking	• Remedy overload condition • Contact Service Center • Replace application/connection
Application responds slower than normal	• Loose connection or coupler • Restricted hydraulic line or fitting • Application/connection leaking	• Tighten connection or coupler • Clean and replace if damaged • Replace application/connection
Application does not return fluid to pump (i.e. cylinder will not retract)	• Malfunctioning coupler, damaged application	• **Secure load by other means**. **Depressurize** pump and hose, remove coupler and/or application, then renew or replace
Application does not fully extend (cylinder or spreader)	• Reservoir overfilled • Fluid level in pump is low	• **Secure load by other means**. **Depressurize** pump and hose, remove application, then drain fluid to proper level • **Secure load by other means**. **Depressurize** pump and hose, remove application, then fill fluid to proper level
Poor performance	• Fluid level in pump is low	• Ensure proper fluid level

Air Hydraulic Pump Service Parts

MODEL: PA1500L

SFA Companies 10939 N. Pomona Ave. Kansas City, MO 64153
Tel: 888-332-6419 * Fax: 816-891-6599
E-mail: sales@bvahydraulics.com Website: www.bvahydraulics.com

Note: Not all components of the pump are replacement items, but are illustrated as a convenient reference of location and position in the assembly sequence.

PA1500L-M0
rev 08/07

Parts Illustration

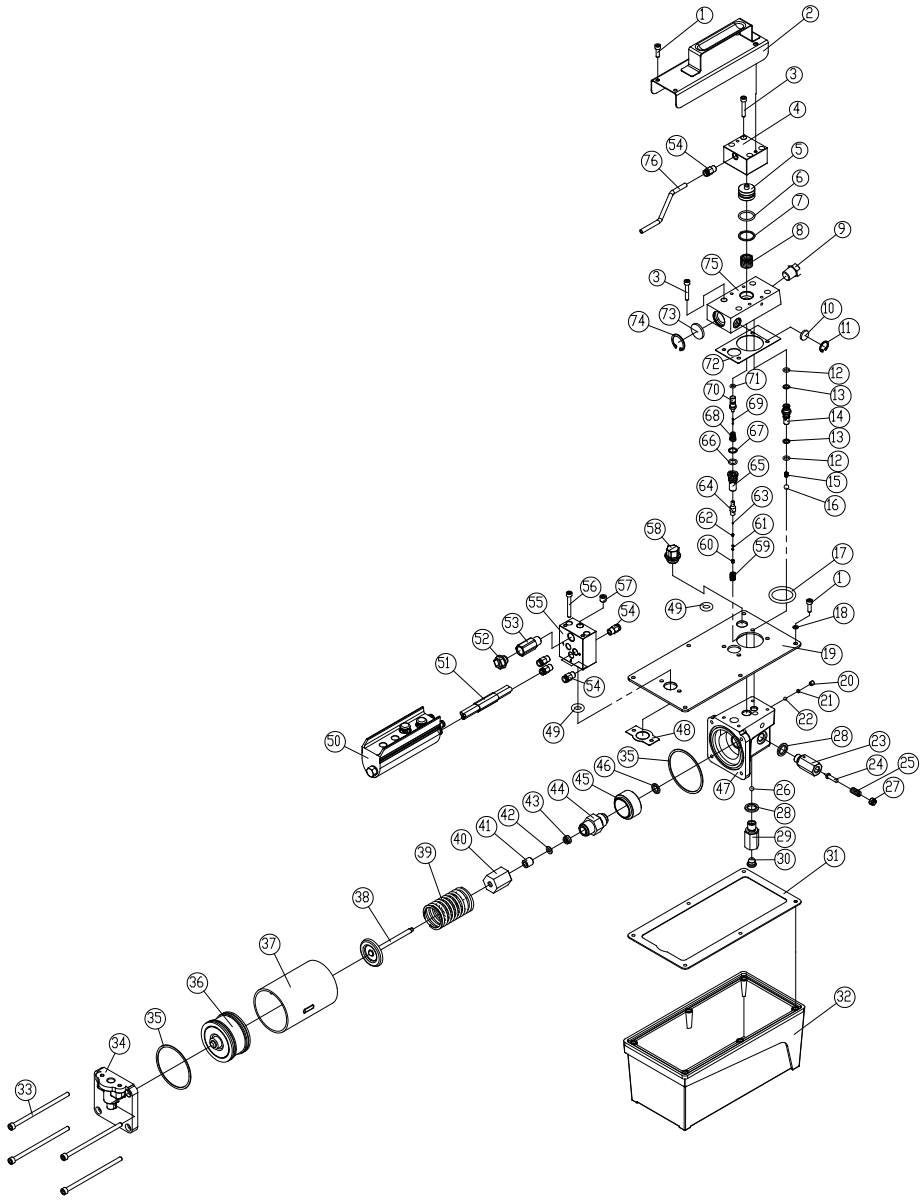

Note: To ensure safe and reliable performance, replace worn or damaged parts with BVA Hydraulics Authorized Replacement Parts only.

Air Hydraulic Pump Service Parts

MODEL: PA1500L

SFA Companies 10939 N. Pomona Ave. Kansas City, MO 64153
Tel: 888-332-6419 * Fax: 816-891-6599
E-mail: sales@bvahydraulics.com Website: www.bvahydraulics.com

Note: Not all components of the pump are replacement items, but are illustrated as a convenient reference of location and position in the assembly sequence.

PA1500L-M0
rev 08/07

Parts List

Item	Part Number	Description	Qty
1	649-1-0050-055	Allen screw (M5X0.8X5L)	10
2	A57-3-5003-109	Pump handle	1
3	649-1-0050-046	Allen screw (M5X0.8X30L)	8
4	A57-6-5301-105	Release valve, air motor piston	1
5	A57-6-5302-107	Release valve piston,	1
6	*	O-ring	1
7	*	Back up ring	1
8	511-2-0181-103	Compression spring	1
9	D05-6-1001-106	Manifold plug (oil output port)	1
10	A57-6-3007-105	Noise suppresor	1
11	666-5-0160-107	C-clip	1
12	*	O-ring	2
13	*	Back-up ring	2
14	A57-6-4002-201	Oil discharge valve	1
15	512-2-0043-108	Compression spring	1
16	601-7-0009-001	Steel ball	1
17	511-7-0410-102	O-ring	1
18	*	Copper washer	6
19	A57-6-1603-202	Reservoir top plate	1
20	644-1-0060-05311	Set screw	1
21	503-9-0050-106	Steel ball seat	1
22	601-7-0006-005	Steel ball	1
23	A59-6-1017-102	Pressure relief valve cylinder	1
24	A17-6-1216-102	Pressure relief valve stem	1
25	512-2-0067-010	Compression spring	1
26	601-7-0008-009	Steel ball	1
27	A17-5-1603-300	Pressure relief valve screw	1
28	532-3-0127-106	Crush washer (steel & rubber)	2
29	A59-6-1015-108	Oil intake valve	1
30	520-8-0134-101	Filter	1
31	*	Reservoir gasket	1
32	A57-6-1601-107	Oil reservoir	1
33	649-1-0060-122	Thru bolt, air motor	4
34	A57-6-1002-105	End plate, air motor	1
35	A17-6-2105-108	Gasket	2
36	A17-4-2100-500	Air motor piston	1
37	A57-6-1003-107	Cylinder, air motor piston	1
38	A57-3-1011-108	Pump piston	1
39	512-2-0410-017	Compression spring	1
40	A57-6-1014-102	Pump piston guide	1
41	A57-6-2023-108	Bushing	1
42	573-7-0120-105	Back-up ring	1
43	*	U-cup	1
44	A59-6-1013-105	Pump piston cylinder	1
45	A57-6-1016-106	Spacer	1
46	H18-6-8103-104	Crush washer (Steel and rubber)	1
47	A57-6-1001-204	Base, hydraulic unit	1
48	A57-6-1605-105	Gasket	1
49	511-7-0140-200	O-ring	2
50	A57-3-5002-107	Remote control assy.	1
51	A57-6-5309-101	Air hose	1
52	A17-6-1105-103	Manifold plug, air	1
53	A57-6-2062-108	Air inlet connector (H17x41L, thread 1/4"-18NPTF both ends)	1
54	651-7-0063-007	Air line coupler (H10x20L, thread 1/8"PT, 1/4" air line)	5
55	A57-6-5305-103	Air inlet base	1
56	642-1-0050-048	Allen screw (M5X0.8X40L)	2
57	641-1-0098-103	Hex bolt	1
58a	A57-3-5007-107	Shipping plug (red)	1
58b	A57-3-1900-109	Air vent plug (black)	1
59	512-2-0061-100	Compression spring	1
60	644-1-0040-204	Lower assy. bolt, release valve	1
61	512-2-0033-105	Compression spring	1
62	503-9-0035-100	Steel ball seat	1
63	601-7-0003-009	Steel ball	1
64	A57-6-3003-305	Release valve	1
65	A57-6-3004-307	Release valve guide	1
66	*	O-ring	1
67	*	Back-up ring	1
68	552-2-0010-105	Compression spring	1
69	*	Release valve pin	1
70	A57-6-3001-112	Release valve cap	1
71	*	O-ring	1
72	A57-6-1604-103	Gasket	1
73	A17-6-1002-103	Noise suppresor	1
74	666-5-0250-108	C-clip	1
75	A57-5-4001-102	Oil manifold	1
76	A57-6-5303-120	Air hose	1
(*)	A57-3-9909-107	Seal kit	-

(*) Seal kit includes item #6, 7, 12, 13, 18, 31, 43, 66, 67, 69, 71

Air Hydraulic Pump Service Parts

MODEL: PA3801L

SFA Companies 10939 N. Pomona Ave. Kansas City, MO 64153
Tel: 888-332-6419 * Fax: 816-891-6599
E-mail: sales@bvahydraulics.com Website: www.bvahydraulics.com

Note: Not all components of the pump are replacement items, but are illustrated as a convenient reference of location and position in the assembly sequence.

PA1500L-M0
rev 08/07

Parts Illustration

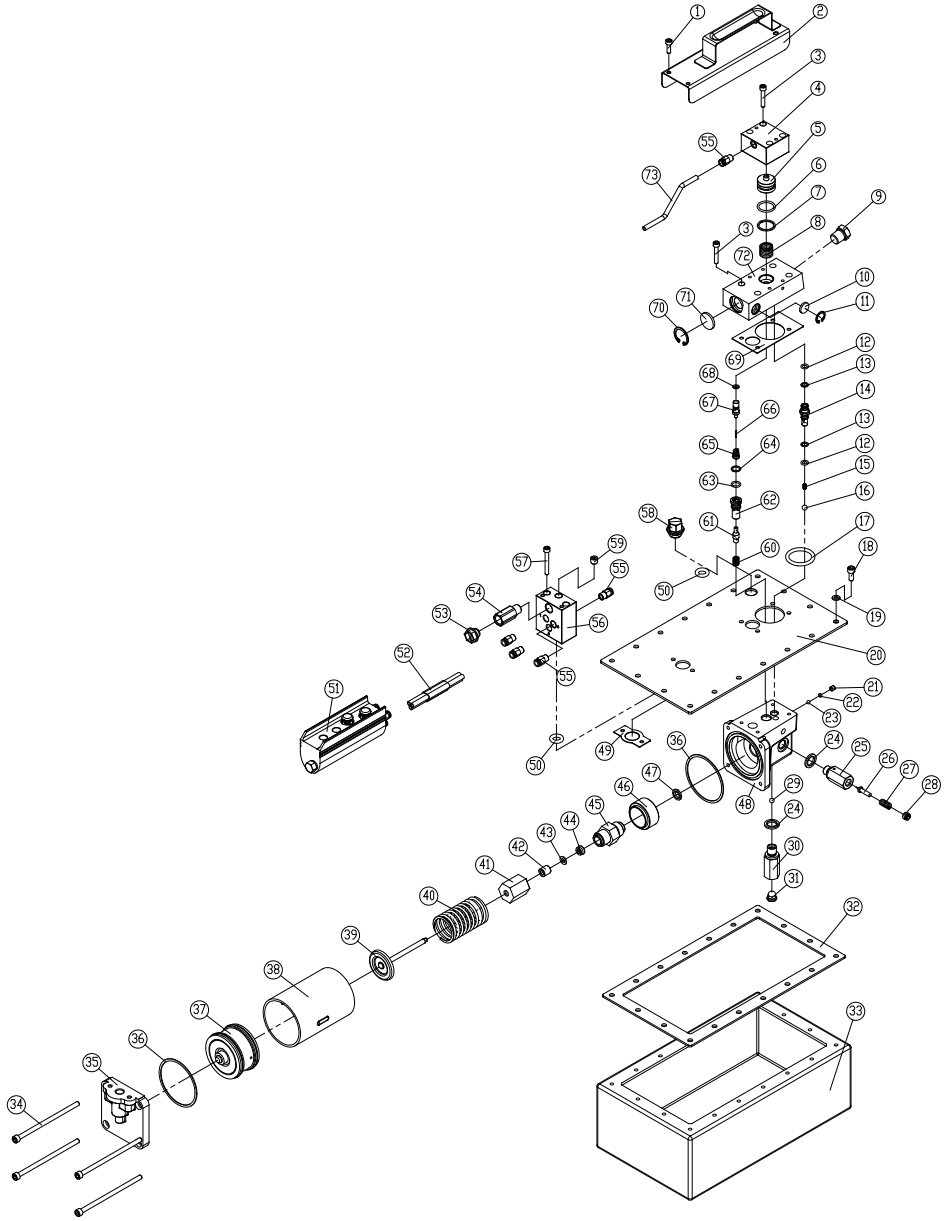

Note: To ensure safe and reliable performance, replace worn or damaged parts with BVA Hydraulics Authorized Replacement Parts only.

Air Hydraulic Pump Service Parts

MODEL: PA3801L

SFA Companies 10939 N. Pomona Ave. Kansas City, MO 64153
Tel: 888-332-6419 * Fax: 816-891-6599
E-mail: sales@bvahydraulics.com Website: www.bvahydraulics.com

Note: Not all components of the pump are replacement items, but are illustrated as a convenient reference of location and position in the assembly sequence.

PA1500L-M0
rev 08/07

Parts List

Item	Part Number	Description	Qty.
1	649-1-0050-055	Screw M5x0.8x16L	10
2	A57-3-5003-109	Handle	1
3	649-1-0050-046	Screw M5x0.8x30L	8
4	A57-6-5301-105	Release cylinder	1
5	A57-6-5302-107	Release piston	1
6	*	O-ring	1
7	*	Back-up ring	1
8	511-2-0181-103	Compression spring	1
9	D05-6-1001-106	Nut H19x23L	1
10	A57-6-3007-105	Noise Suppresor	1
11	666-5-0160-107	C-clip no.16	1
12	*	O-ring	2
13	*	Back-up ring	2
14	A57-6-4002-201	Oil outlet valve	1
15	512-2-0043-108	Compression spring	1
16	601-7-0009-001	Steel ball	1
17	*	O-ring	1
18	649-1-0060-040	Screw M6x1x15L	18
19	*	Washer	18
20	A57-6-1603-202	Reservoir cover	1
21	644-1-0060-053	Screw M6x1x6L	1
22	503-9-0050-106	Steel ball block	1
23	601-7-0006-005	Steel ball	1
24	*	Special washer	2
25	A59-6-1017-102	High pressure base	1
26	A17-6-1216-102	Pin	1
27	512-2-0067-010	Compression spring	1
28	A17-5-1603-300	Pressure adjust nut	1
29	601-7-0008-009	Steel ball	1
30	A57-6-6006-108	Oil entrance valve	1
31	520-8-0134-101	Filter	1
32	*	Packing	1
33	A57-6-6007-201	Reservoir	1
34	649-1-0060-122	Screw M6xP1x120L	4
35	A57-6-1002-105	Motor cover	1
36	A17-6-2105-108	Cylinder washer	2
37	A17-4-2100-500	Air piston assy.	1
38	A57-6-1003-107	Cylinder	1
39	A57-3-1011-108	Piston assy.	1
40	512-2-0410-017	Compression spring	1
41	A57-6-1014-102	Piston cover	1
42	A57-6-2023-108	Bushing	1
43	*	Back-up ring	1
44	*	U-cup	1
45	A59-6-1013-105	Pump	1
46	A57-6-1016-106	Washer	1
47	*	Special washer	1
48	A57-6-1001-204	Base	1
49	*	Pad B	1
50	*	O-ring	2
51	A57-3-5002-107	Air control assy.	1
52	A57-6-5309-101	Air tubes	1
53	A17-6-1105-103	Plastic cover	1
54	A57-6-2062-108	Air inlet connector (H17x41L,1 thread 1/4"-18NPTF both ends)	1
55	651-7-0063-108	Coupler	5
56	A57-6-5305-103	Air entrance base	1
57	642-1-0050-048	Screw M5x0.8x40L	2
58	641-1-0098-103	Screw 1/8”	1
59a	A57-3-5007-107	Shipping plug (red)	1
59b	A57-3-1900-109	Air vent plug (black)	1
60	512-2-0061-100	Compression Spring	1
61	A57-4-3003-105	Release Valve	1
62	A57-6-3004-307	Release base	1
63	*	O-ring	1
64	*	Back-up Ring	1
65	552-2-0010-105	Compression Spring	1
66	*	Release pin	1
67	A57-6-3001-112	Release bar	1
68	*	O-ring	1
69	*	Pad A	1
70	666-5-0250-108	Silencer	1
71	A17-6-1002-103	C-clip	1
72	A57-5-4001-102	Oil outlet base	1
73	A57-6-5303-120	Air tube	1
(*)	A57-3-9914-100	Seal kit	-

(*) Seal kit includes item #6, 7, 12, 13, 17, 19, 24, 32, 43, 44, 47, 49, 50, 63, 64, 66, 68, 69

LIMITED LIFETIME WARRANTY

BVA Hydraulics®, represented in the United States by SFA Companies [“SFA”] warrants this product to be free from defects in material and workmanship for the life of the product as long as the original purchaser owns the product. The warranty is non-transferable and is subject to the terms, exclusions, and limitations described below:

- Damaged components, including but not limited to bent rams, dented or crushed cylinder walls, broken welds or couplers as well as worn out seals, o-rings and springs are the result of misuse and not covered by warranty and BVA Hydraulics will not provide any warranty credit for such damaged components.
- This warranty does not cover ordinary wear and tear, overloading, alterations (including repairs or attempted repairs not performed by BVA Hydraulics or one of its authorized personnel), improper fluid use, or use of the product in any manner for which the product was not intended or the use of which is not in accordance with the instructions or warnings provided with the product.
- In the unlikely event that a BVA Hydraulics product fails due to material defect in workmanship, you may contact SFA for disposition. In such cases, the customer’s sole and exclusive remedy for any breach or alleged breach of warranty is limited to the repair or replacement of the defective product.
- Under no circumstances is BVA Hydraulics liable for any consequential or incidental damage or loss whatsoever.
- THIS WARRANTY IS LIMITED TO NEW PRODUCTS SOLD THROUGH AUTHORIZED DISTRIBUTORS AND OTHER CHANNELS DESIGNATED BY BVA HYDRAULICS. NO AGENT, EMPLOYEE OR OTHER REPRESENTATIVE OF BVA HYDRAULICS IS AUTHORIZED TO MODIFY THIS WARRANTY.
- THE FOREGOING IS EXCLUSIVE AND IS IN LIEU OF ALL OTHER EXPRESS AND IMPLIED WARRANTIES, INCLUDING BUT NOT LIMITED TO THE IMPLIED WARRANTIES OF MERCHANTABILITY AND FOR A FITNESS FOR A PARTICULAR PURPOSE.
- Components not manufactured by BVA Hydraulics including certain motor systems, gasoline engines, and others are not covered by this warranty and instead are covered by the manufacturer’s separate manufacturer’s warranty provided in the package.
- BVA Hydraulics’ liability in all cases is limited to, and will not exceed the purchase price paid for the product.

SFA Companies
10939 N. Pomona Ave. Kansas City, MO 64153
Tel: 888-332-6419
E-mail: sales@bvahydraulics.com

SFA Companies
10939 N. Pomona Ave. Kansas City, MO 64153
Tel: 888-332-6419
E-mail: sales@bvahydraulics.com

SFA Companies
10939 N. Pomona Ave. Kansas City, MO 64153
Tel: 888-332-6419
E-mail: sales@bvahydraulics.com