Hand Pump Instruction Manual

MODELS: P350, P601S, P1000, P1000AD & P2001

SFA Companies 10939 N. Pomona Ave. Kansas City, MO 64153
Tel: 888-332-6419 * Fax: 816-448-2142
E-mail: sales@bvahydraulics.com Website: www.bvahydraulics.com

Maximum Operating Pressure 10,000 PSI

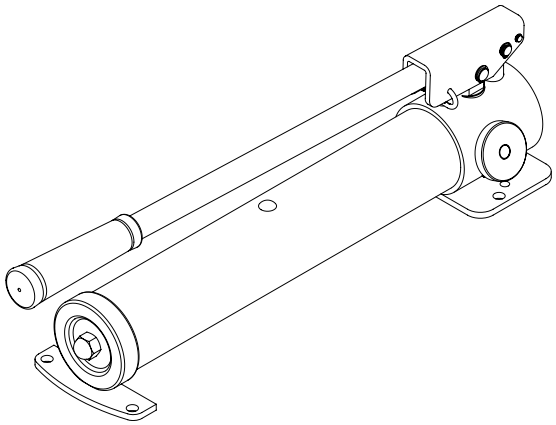

Models P350

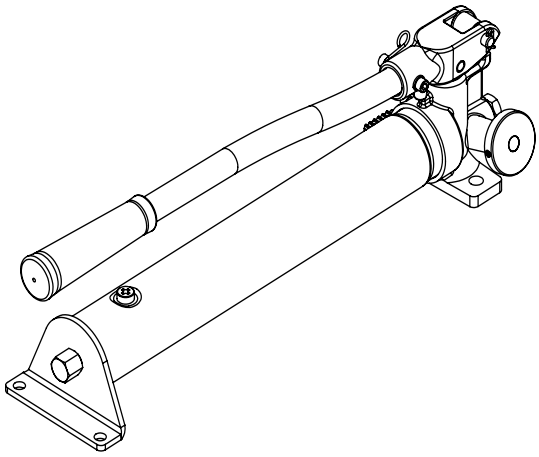

Model P601S

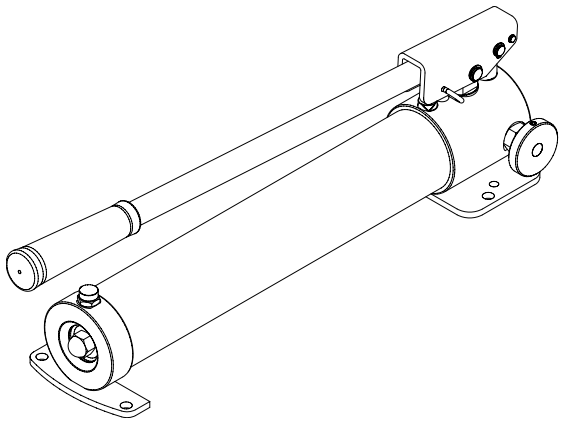

Model P1000 &P1000AD

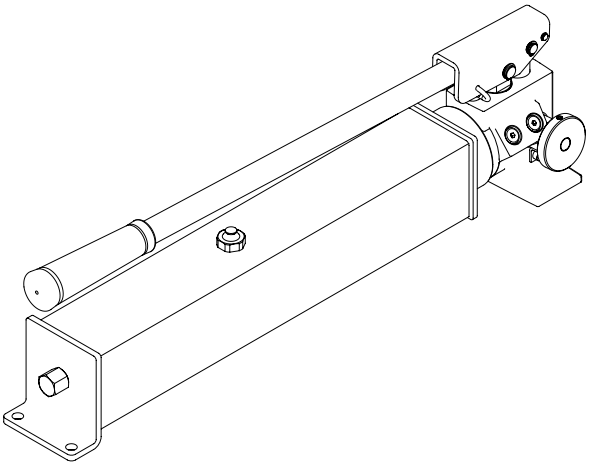

Model P2001

This is the safety alert symbol. It is used to alert you to potential personal injury hazards. Obey all safety messages that follow this symbol to avoid possible injury or death.

Printed in Taiwan

SAFETY AND GENERAL INFORMATION

Save these instructions. For your safety, read and understand the information contained within. The owner and operator shall have an understanding of this product and safe operating procedures before attempting to use this product. Instructions and safety information shall be conveyed in operator's native language before use of this product is authorized. Make certain that the operator thoroughly understands the inherent dangers associated with the use and misuse of the product. If any doubt exists as to the safe and proper use of this product as outlined in this factory authorized manual, remove from service immediately.

Inspect before each use. It is recommended that, prior to each use, an inspection be done by qualified personnel and that any missing or damaged parts, decals, warning/safety labels or signs be replaced with factory authorized replacement parts only. Any pump that appears to be damaged in any way, is worn, leaking or operates abnormally shall be removed from service immediately until such time as repairs can be made. Owners and operators of this equipment shall be aware that the use and subsequent repair of this equipment may require special training and knowledge.

PRODUCT DESCRIPTION

BVA Hydraulic Hand Pumps are engineered to meet most industrial standards for performance and safety. P1000RP has a unique two-stage hydraulic circuit which allows quick displacement of hydraulic fluid under no load conditions and easy pumping in loaded conditions. These lever operated pumps supply compressed hydraulic fluid to compatible applications i.e. rams, presses, spreaders, compactors and crimping machines, anywhere that 10,000 PSI of fluid pressure is needed. Special skill, knowledge and training may be required for a specific task and the product may not be suitable for all the jobs described above. Unsuitable applications would include applications that call for a device to move, level or support persons, animals, hazardous materials, mobile homes/dwellings in general, mirrors and/or plate glass, and/or to connect/secure hatches, components, etc. between bulkheads. The user must ultimately make the decision regarding suitability of the product for any given task and assume the responsibility of safety for himself/herself and others in the work area.

WARNING: *Always check connections before using. Alteration of these products is strictly prohibited. Use only those adapters and attachments provided and approved by the manufacturer.*

WARNING: *To reduce the risk of personal injury and/or property damage, ensure that the rated working pressure of each pressurized attachment be equal to or greater than the rated working pressure developed by the hydraulic pump*

WARNING: *Model P601S is operated with a non-vented reservoir. If the reservoir is subjected to high pressure, the casing may rupture. Never attempt to return more oil to the reservoir than it is capable of holding*

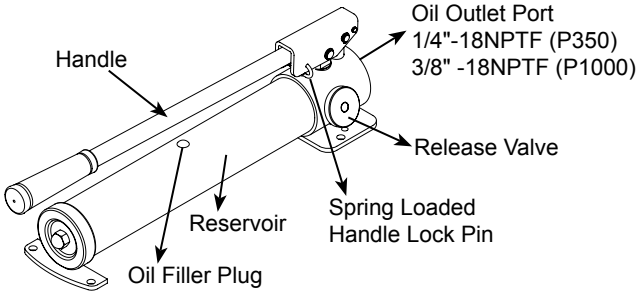

Figure 1 - Model P350 Components

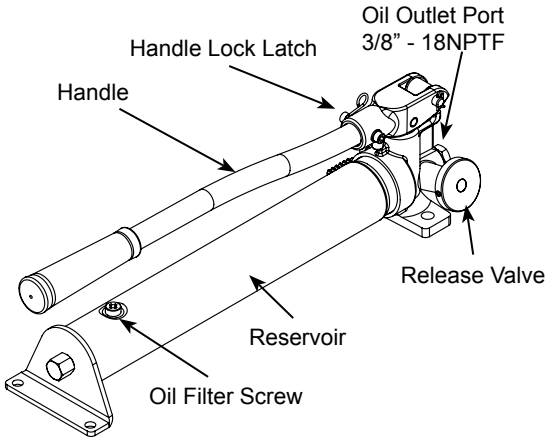

Figure 2 - Model P601S Compnents

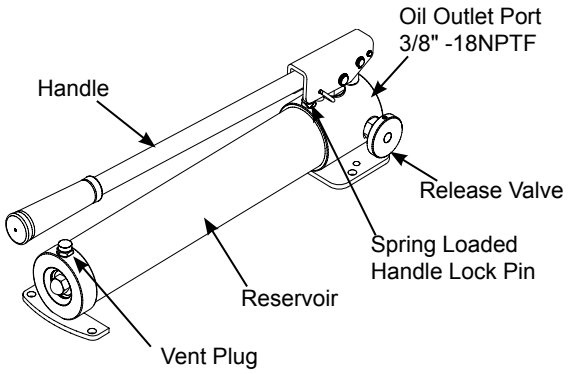

Figure 3 - Model P1000 & P1000AD Components

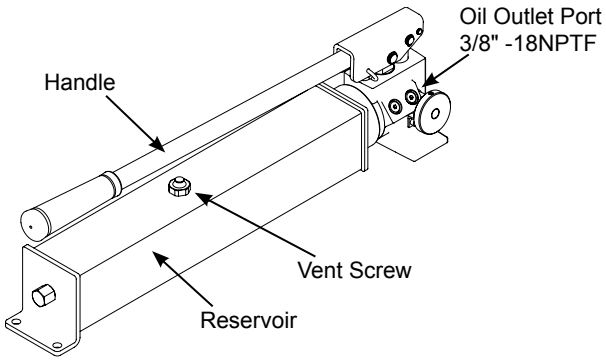

Figure 4 - Model P2001 Components

SPECIFICATIONS

Model	Usable Oil Capacity (in^3)	Used with Cylinder	Pump Type	Pressure Rating (psi)		Oil Displacement per Stoke (in^3)		Operating Force (lbs)	Mounting Plate Holes Distance (in)	Pump Size (L x W x H)	Weight (lbs)
				1st stage	2nd stage	1st stage	2nd stage				
P350	21.3	Single Acting	Two speed	200	10,000	0.18	0.05	88	2.56	14.1 x 3.4 x 5.9	6.6
P601S	36.5		Single speed				0.15	109	3.74	20.8 x 5.2 x 6.5	13.0
P1000	61.0		Two speed	200		0.81	0.14	99	3.94	20 x 4.9 x 6.3	13.7
P1000AD											
P2001	122.0							95	2.56	24.3 x 4.8 x 6.9	24.2

⚠ WARNING

- Study, understand, and follow all instructions provided with and on this device before use.
- All WARNING statements must be carefully observed to help prevent personal injury.
- No alteration shall be made to this device.
- Always wear protective gear when operating hydraulic equipment.
- Keep hydraulic equipment away from flames and heat. Hydraulic fluid can ignite and burn. Do not operate if leaks are detected.
- **Crush Hazard.** Keep hands and feet away from loading area. Avoid pinch points or crush points that can be created by the load, cylinder, or any equipment of system.
- To avoid crushing and related injuries: NEVER work on, under or around a lifted load before it is properly supported by appropriate mechanical means. Never rely on hydraulic pressure alone to support load.

HYDRAULIC PUMPS

- The user must be a qualified operator familiar with the correct operation, maintenance, and use of pumps. Lack of knowledge in any of these areas can lead to personal injury.
- Do not exceed rated capacity of the pump or any equipment in the system.
- Never attempt to lift a load weighing more than the capacity of the cylinder.
- Do not subject the pump and its components to shock loads.
- Burst hazard exists if hose or connection pressure exceeds rated pressure.
- Inspect pump, cylinder, hoses and connections before each use to prevent unsafe conditions from developing. Do not use if they are damaged, altered or in poor condition. Do not operate the system with bent or damaged coupler or damaged threads.
- Never hold or stand directly in line with any hydraulic connections while pressurizing.
- Use gauge or other load measuring instrument to verify load.
- Never attempt to disconnect hydraulic connections under pressure. Release all line pressure before disconnecting hoses.
- Use only approved accessories and approved hydraulic fluid.
- Never attach ANY component not authorized by manufacturer.
- Always ensure that the chosen application is stable to work on and around.
- Do not connect to application which can return more oil to the reservoir than the pump reservoir can hold.
- Do not connect pump to hydraulic system powered by another pump.
- This device is not suitable for use as support device! As the system load is lifted, use blocking and cribbing to guard against a falling load.
- All personnel must be clear before lowering load or depressurizing the system.
- Never try to disassemble a hydraulic cylinder, refer repairs to qualified, authorized personnel.

HYDRAULIC HOSES & FLUID TRANSMISSION LINES

- Avoid short runs of straight line tubing. Straight line runs do not provide for expansion and contraction due to pressure and/or temperature changes.
- Reduce stress in tube lines. Long tubing runs should be supported by brackets or clips. Before operating the pump, tighten all hose connections with proper tools. Do not overtighten. Connections should only be tightened securely and leak-free. Overtightening can cause premature thread failure or high pressure fittings to burst.
- Should a hydraulic hose ever rupture, burst or need to be disconnected, immediately shut off the pump and release all pressure. Never attempt to grasp a leaking pressurized hose with your hands. The force of escaping hydraulic fluid can inflict injury.
- Do not subject the hose to potential hazard such as fire, sharp objects, extreme heat or cold, or heavy impact.
- Do not allow the hose to kink, twist, curl, crush, cut or bend so tightly that the fluid flow within the hose is blocked or reduced. Periodically inspect the hose for wear.
- Do not pull, position or move setup by the hose.
- Hose material and coupler seals must be compatible with hydraulic fluid used. Hoses also must not come in contact with corrosive materials such as battery acid, creosote-impregnated objects and wet paint. Never paint a coupler or hose.
- FAILURE TO HEED THESE WARNINGS MAY RESULT IN PERSONAL INJURY AS WELL AS PROPERTY DAMAGE.

BEFORE USE

1. Before using this product, read the instruction manual completely and familiarize yourself thoroughly with the product, its components and recognize the hazards associated with its use.
2. Verify that the product and the application are compatible. Inspect before each use. Do not use if bent, broken, leaking or damaged components are noted.
3. Replace worn or damaged parts and assemblies with BVA Hydraulics Authorized Replacement Parts only (See Replacement Parts Section). Lubricate as instructed in Maintenance Section.
4 Ensure method of confirming load is accurate and working properly. Have gauge or load cell accuracy verified by qualified personnel on a yearly basis.
5. Pumps should be stored where protected from the elements, abrasive dust, and damage. Pumps can be stored horizontally or vertically.

SET UP

WARNING: *The pump's maximum working pressure is 10,000 PSI. Make sure that all hydraulic equipment such as cylinders, hoses, couplers and etc. used with this pump are rated at 10,000 PSI operating pressure or more.*

1. Prepare the pump for use:

   A) **For models P350, P1000 & P1000AD:**
   - Pull spring loaded lock pin, pivot toward rear to unlock the handle (Fig. 5).
   - Remove shipping plug and replace with air vent plug (Fig. 6).
   - Pull vent plug stem upward before use, press down when moving or storing the pump (Fig. 7).

   B) **For model P601S:**
   - Push the handle lock latch to unlock the pump handle (Fig. 8).

   C) **For model P2001:**
   - Pull spring loaded lock pin pivot toward rear to unlock the handle (Fig. 5).
   - Pull vent plug stem upward before use, press down when moving or storing the pump (Fig. 7).
2. Depressurize system by opening release valve counter-clockwise, but no more than 2 full turns. Then carefully remove the threaded plug on oil outlet port, and connect 3/8" NPTF (1/4" NPTF P350) hydraulic connection to oil outlet port, i.e. coupler, gauge adapter, hydraulic hose etc. Ensure all fluid ports and thread connections are clean before connect.

NOTICE: *Always secure threaded connections with non-hardening pipe thread compound. Take care not to introduce compound into port orifices. Tighten securely to prevent accidental removal of components while in use.*

3. Install a pressure gauge in-line from the pump for better control and safety purpose.

NOTICE: *It is recommended to use BVA fittings, gauge adapter and guage.*

4. Tighten securely to prevent accidental removal of components while in use.
5. Check for leaks in system and repair by qualified personnel as needed. Depressurize the hydraulic system before servicing.

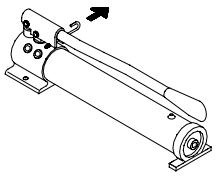

Figure 5 - Pull spring loaded lock pin, pivot toward rear to unlock pump handle.

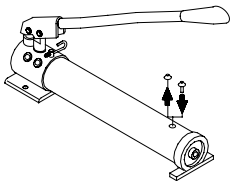

Figure 6 - Remove shipping plug and replace with air vent plug before initial use.

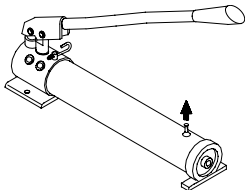

Figure 7 - Pull stem upward before use, press down when moving or storing pump.

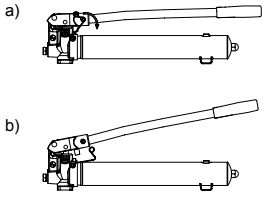

Figure 8 - Pull stem upward before use, press down when moving or storing pump.

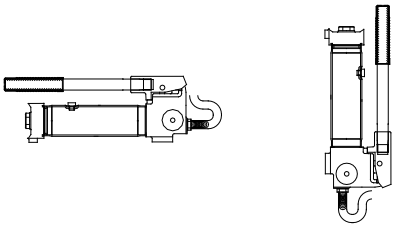

Figure 9 - Horizontal and Vertical Position

OPERATION

WARNING: *ALWAYS monitor pressure, load or position using suitable equipment. Pressure may be monitored by means of an optional manifold and gauge (contact BVA Hydraulics). Load may be monitored by means of a load cell and digital indicator. Correct application position can only be determined by the operator of the equipment.*

1. Remove the threaded plug, then connect the pump to suitable application.
2. Ensure the oil level is correct and the system fittings and connections are leak free before operating the pump.
3. Pump may be used in horizontal and vertical position as illustrated in Figure 9.

CAUTION: *NEVER operate pump with release valve closed and disconnected from application. If operated in this condition, the hose and connections become pressurized. This increases burst hazard. Damage may occur to pump and its components*

4. Close release valve by turning it clockwise. Finger tight ONLY. Using tools on release valve can damage it and cause the pump to malfunction.
5. Pump handle until desired pressure, load or position is reached.
6. Pressure will maintain until the release valve is opened.
7. To retract application, turn the release valve knob slowly counterclockwise (never more that 2 full turns).

OPERATION (con't)

8. **Excludes model P601S:**
   Under no load or 1st stage condition, the pump operates in high flow for rapid advance. When load is contacted, the pump will automatically shift to the 2nd stage for building pressure. When pump pressure reaches approximately 200 psi, you must momentarily stop pumping and raise the handle to shift to the high pressure stage. After the pump shifts, pumping takes less effort.

NOTICE: *operate pump handle at slower speed during the high flow 1st stage to ensure the pump delivers maximum oil volume.*

MAINTENANCE

1. Inspect hoses and connections daily. Replace damaged components immediately with BVA Hydraulics Replacement Parts only.
2. Tighten connections as needed. Use pipe thread sealing compound when servicing connections.
3. Use only good quality hydraulic fluid. We recommend using premium hydraulic fluid. **Never** use brake fluid, transmission fluid, turbine oil, motor oil, alcohol, glycerine etc. Use of other than good quality hydraulic oil will void warranty and damage the pump, hose, and application.

Adding Hydraulic Fluid

1. Depressurize and disconnect hydraulic hose from application.
2. With pump in its upright, horizontal position, remove vented oil filler plug/screw located on top of the reservoir.
3. Use a small funnel to fill reservoir to within 1/4" (6 mm) of the opening.
4. Wipe up any spilled fluid and reinstall the vented oil filler plug/screw.

Changing Hydraulic Fluid

For best results, change fluid once a year.

1. Remove vented oil filler plug/screw and drain used fluid into a sealable container.
2. Dispose of fluid in accordance with local regulations.
3. Fill with a good quality hydraulic jack oil as recommended above. Reinstall vented oil filler plug/screw.

Lubrication

Use a light machine oil to lubricate pivot points, hinges etc.

Storage

1. When not in use, depressurize and disconnect hoses from application.
2. Wipe clean, throughly
3. Pump should be stored where protected from the elements, abrasive dust, and damage. Store in clean, dry environment. Avoid temperature extremes. Lock handle into position using the spring loaded locking pin mechanism.
4. Shield pump with a protective cover.

TROUBLESHOOTING GUIDE

The following information is intended as an aid in determining if problem exists. Pumps should be repaired only by authorized BVA Service Center. For repair service, contact service center in your area.

Symptom	Possible Causes	Corrective Action
Erratic application action	• Air in the system. • External leak. • Internal hydraulic leak.	• Vent the system. • Tighten all connections. • Contact service center.
Application does not extend, move or respond to pressurized fluid	• Overload condition. • Release valve not closed. • Loose couplers/connections. • Faulty couplers/connections. • Pump malfunction.	• Remedy overload condition. • Ensure release valve closed. • Tighten couplers/connections. • Replace couplers/connections. • Contact service center.
Application responds to pressurized fluid, but system does not maintain pressure	• Overload condition. • Release valve not closed. • Pump or valve malfunction. • Application/connection leaking.	• Remedy overload condition. • Ensure release valve closed. • Contact Service Center. • Replace application/connection.
Application responds slower than normal	• Loose connection or coupler. • Restricted hydraulic line or fitting. • Application/connection leaking.	• Tighten connection or coupler. • Clean and replace if damaged. • Replace application/connection.
Application does not return fluid to pump (i.e. cylinder will not retract)	• Malfunctioning coupler, damaged application. • Reservoir overfilled	• Secure load by other means. Open release valve, depressurize pump and hose, remove coupler and/or application, then renew or replace. • Secure load by other means. Open release valve, depressurize pump and hose, remove application, then drain fluid to proper level.
Poor performance	• Fluid level in pump is low.	• Ensure proper fluid level.

Hand Pump Service Parts

MODEL: P350

SFA Companies 10939 N. Pomona Ave. Kansas City, MO 64153
Tel: 888-332-6419 * Fax: 816-448-2142
E-mail: sales@bvahydraulics.com Website: www.bvahydraulics.com

Note: Not all components of the pump are replacement items, but are illustrated as a convenient reference of location and position in the assembly sequence.

Parts Illustration

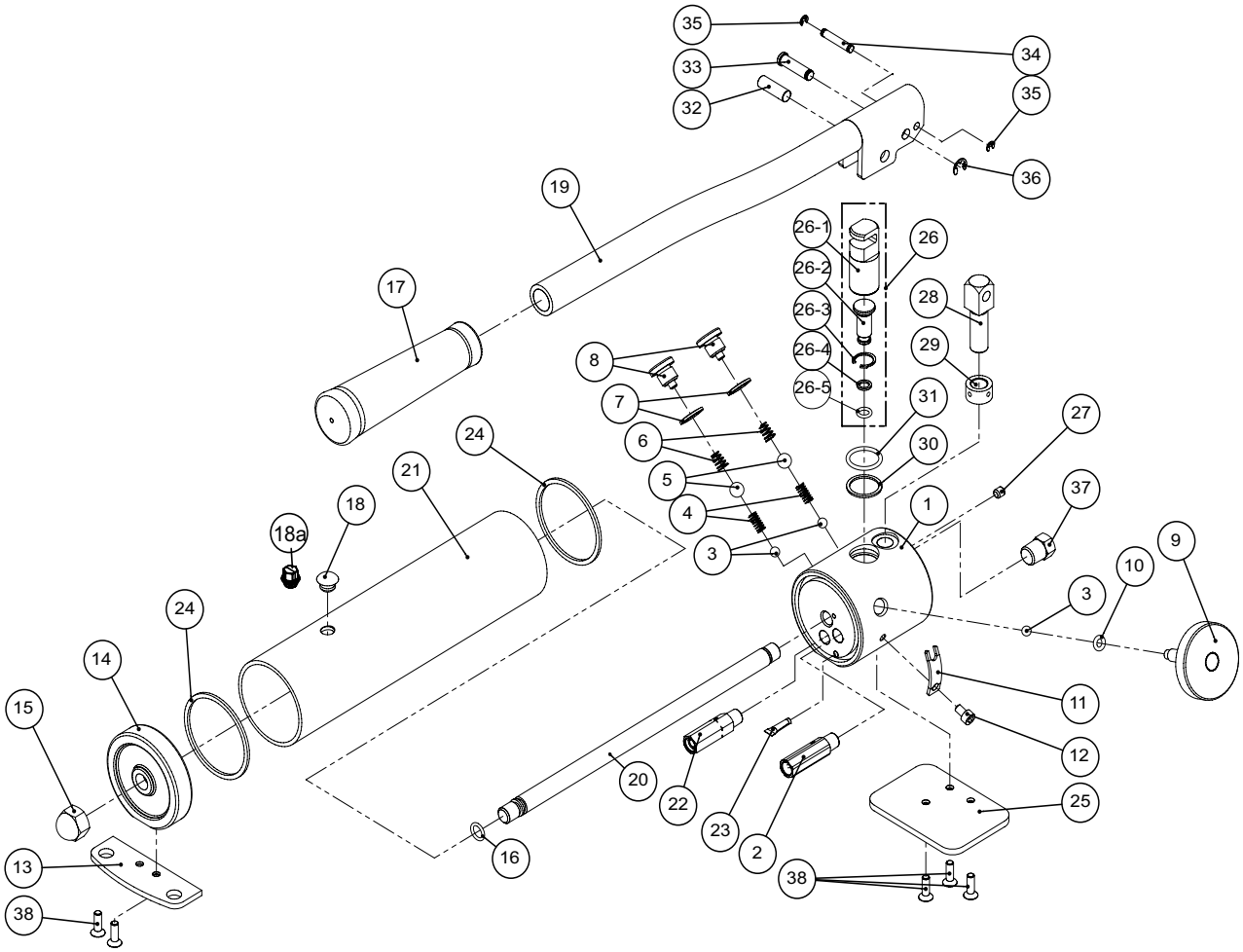

Note: To ensure safe and reliable performance, replace worn or damaged parts with BVA Hydraulics Authorized Replacement Parts only.

Hand Pump Service Parts

MODEL: P350

SFA Companies 10939 N. Pomona Ave. Kansas City, MO 64153
Tel: 888-332-6419 * Fax: 816-448-2142
E-mail: sales@bvahydraulics.com Website: www.bvahydraulics.com

Note: Not all components of the pump are replacement items, but are illustrated as a convenient reference of location and position in the assembly sequence.

Parts List

Item	Part Number	Description	Qty
1	N/A	Base	1
2	H18-4-1902-208	Low Pressure Valve Assembly	1
3	601-7-0008-009	Steel Ball	3
4	512-2-0063-104	Compression Spring	2
5	601-7-0012-000	Steel Ball	2
6	552-2-0080-106	Compression Spring	2
7	*	Special Washer	2
8	H18-6-1215-100	Nut	2
9	H18-4-1603-107	Release Valve	1
10	*	O-Ring	1
11	H39-6-1308-100	Iron Plate	1
12	649-1-0050-028	Screw	1
13	H39-6-1502-207	Support Plate	1
14	H39-6-1501-104	End Cap	1
15	671-2-0100-205	Nut	1
16	*	O-Ring	1
17	H18-6-2112-105	Handle Grip	1
18	505-9-0092-207	Oil Fill Plug	1
18a	H18-4-4000-102	Vent Plug (Brass & Black	1
19	H39-3-2100-204	Handle	1
20	H39-6-4401-105	Screw Bar	1
21	H39-6-1803-201	Tube	1
22	H18-4-1901-105	High Press Valve Assy	1

Item	Part Number	Description	Qty
23	532-8-0040-012	Filter	1
24	*	Washer	2
25	H39-6-1603-102	Base Plate	1
26	H39-4-1606-207	Piston Assy	1
26-1	H39-5-1606-102	Large Piston	1
26-2	H39-5-1307-102	Small Piston	1
26-3	666-5-0150-204	C-Clip	1
26-4	*	Back-up Ring	1
26-5	*	O-Ring	1
27	644-1-0060-05311	Screw	1
28	H39-6-2108-208	Fixing Pillar	1
29	H39-6-2109-109	Fixing Ring	1
30	*	Back-up Ring	1
31	*	O-Ring	1
32	H39-6-1602-100	Pin	1
33	H39-6-2111-106	Pin	1
34	H39-5-2111-100	Pin	1
35	677-5-0030-109	E-Clip	2
36	677-5-0060-108	E-Clip	1
37	H39-5-8104-103	Nut	1
38	651-1-0050-103	Screw	5
(*)	H39-3-9901-102	Seal Kit	1

(*) - Indicates items included in, and available only as part of Seal Kit. Seal Kits require special skill, training and equipment to repair. Installation must be done by Authorized Service Center. Contact BVA for list of Authorized Service Centers.

N/A - Part is not available as replacement.

Hand Pump Service Parts

MODEL: P601S

SFA Companies 10939 N. Pomona Ave. Kansas City, MO 64153
Tel: 888-332-6419 * Fax: 816-448-2142
E-mail: sales@bvahydraulics.com Website: www.bvahydraulics.com

Note: Not all components of the pump are replacement items, but are illustrated as a convenient reference of location and position in the assembly sequence.

Parts Illustration

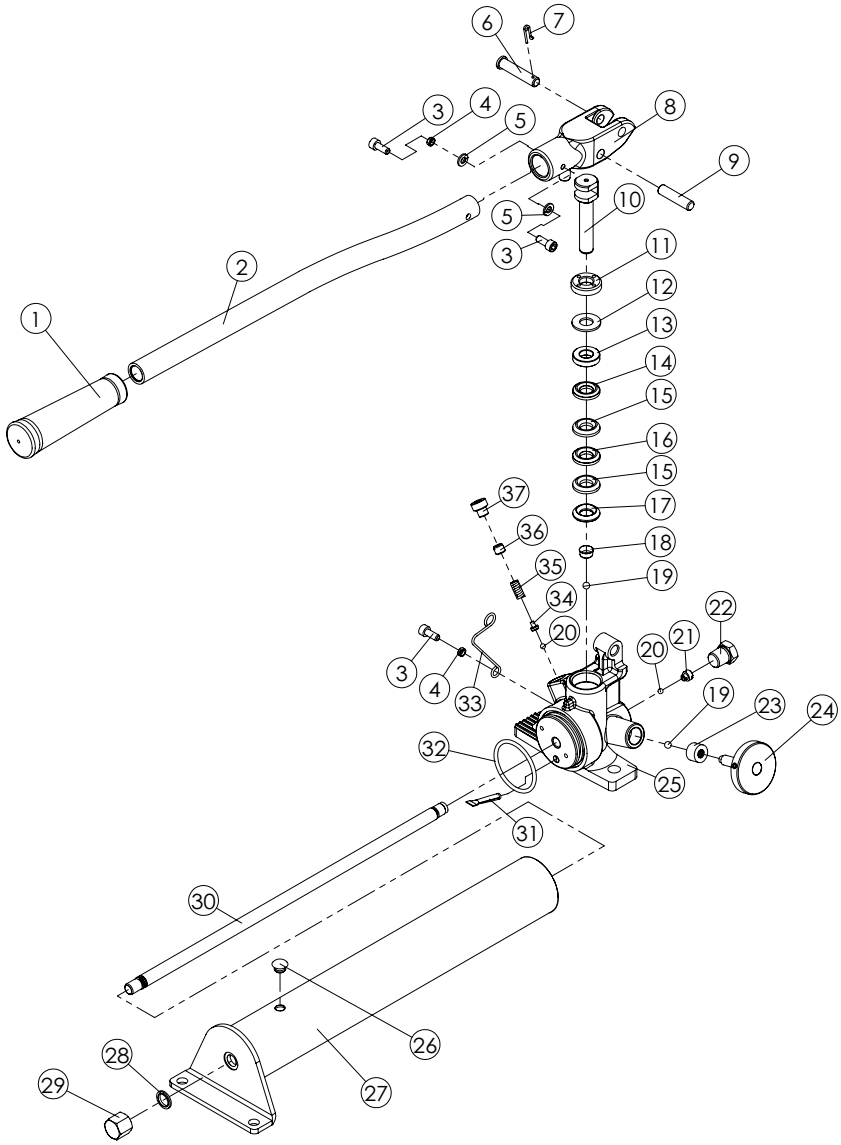

Note: To ensure safe and reliable performance, replace worn or damaged parts with BVA Hydraulics Authorized Replacement Parts only.

Hand Pump Service Parts

MODEL: P601S

SFA Companies 10939 N. Pomona Ave. Kansas City, MO 64153
Tel: 888-332-6419 * Fax: 816-448-2142
E-mail: sales@bvahydraulics.com Website: www.bvahydraulics.com

Note: Not all components of the pump are replacement items, but are illustrated as a convenient reference of location and position in the assembly sequence.

Parts List

Item	Part Number	Description	Qty
1	H18-6-2112-105	Handle Grip	1
2	H54-6-2101-104	Handle	1
3	649-1-0060-040	Screw	3
4	H54-6-2104-100	Bush	2
5	605-3-0060-005	Spring washer	2
6	*	Pin	1
7	*	Retaining pin	1
8	H54-6-2111-107	Handle sleeve	1
9	*	Piston pin	1
10	430-6-1601-209	Piston	1
11	428-6-1104-203	Screw adjustment	1
12	513-3-0270-010	Washer	1
13	428-6-1103-100	Upper seal base	1
14	*	V-oil seal	1
15	*	V-oil seal	2
16	*	V-oil seal	1
17	428-6-1102-209	Lower seal base	1
18	522-8-0127-016	Filter	1
19	601-7-0008-009	Steel Ball	2
20	601-7-0006-005	Steel Ball	2
21	426-6-1105-201	Bolt	1

Item	Part Number	Description	Qty
22	D05-6-1001-106	Oil Plug	1
23	*	Oil seal	1
24	H54-4-2105-100	Release valve	1
25	H54-6-2109-100	Base	1
26	505-9-0092-207	Oil Plug	1
27	H54-3-2103-201	Reservoir	1
28	*	Bonded seal	1
29	H28-6-4404-106	Nut	1
30	H18-5-4401-207	Screw Bar	1
31	532-8-0050-024	Filter	1
32	*	O-ring	1
33	H54-6-2108-108	Hook	1
34	501-9-0085-202	Steel Ball Block	1
35	516-2-0080-010	Safety Spring	1
36	426-6-1201-106	Adjustment Screw	1
37	324-4-1900-208	Filler screw assy.	1
*	H54-3-9902-105	Repair Kit	1

(*) - Indicates items included in, and available only as part of Seal Kit. Seal Kits require special skill, training and equipment to repair. Installation must be done by Authorized Service Center. Contact BVA for list of Authorized Service Centers.

N/A - Part is not available as replacement.

Hand Pump Service Parts

MODEL: P1000

SFA Companies 10939 N. Pomona Ave. Kansas City, MO 64153
Tel: 888-332-6419 * Fax: 816-448-2142
E-mail: sales@bvahydraulics.com Website: www.bvahydraulics.com

Note: Not all components of the pump are replacement items, but are illustrated as a convenient reference of location and position in the assembly sequence.

Parts Illustration

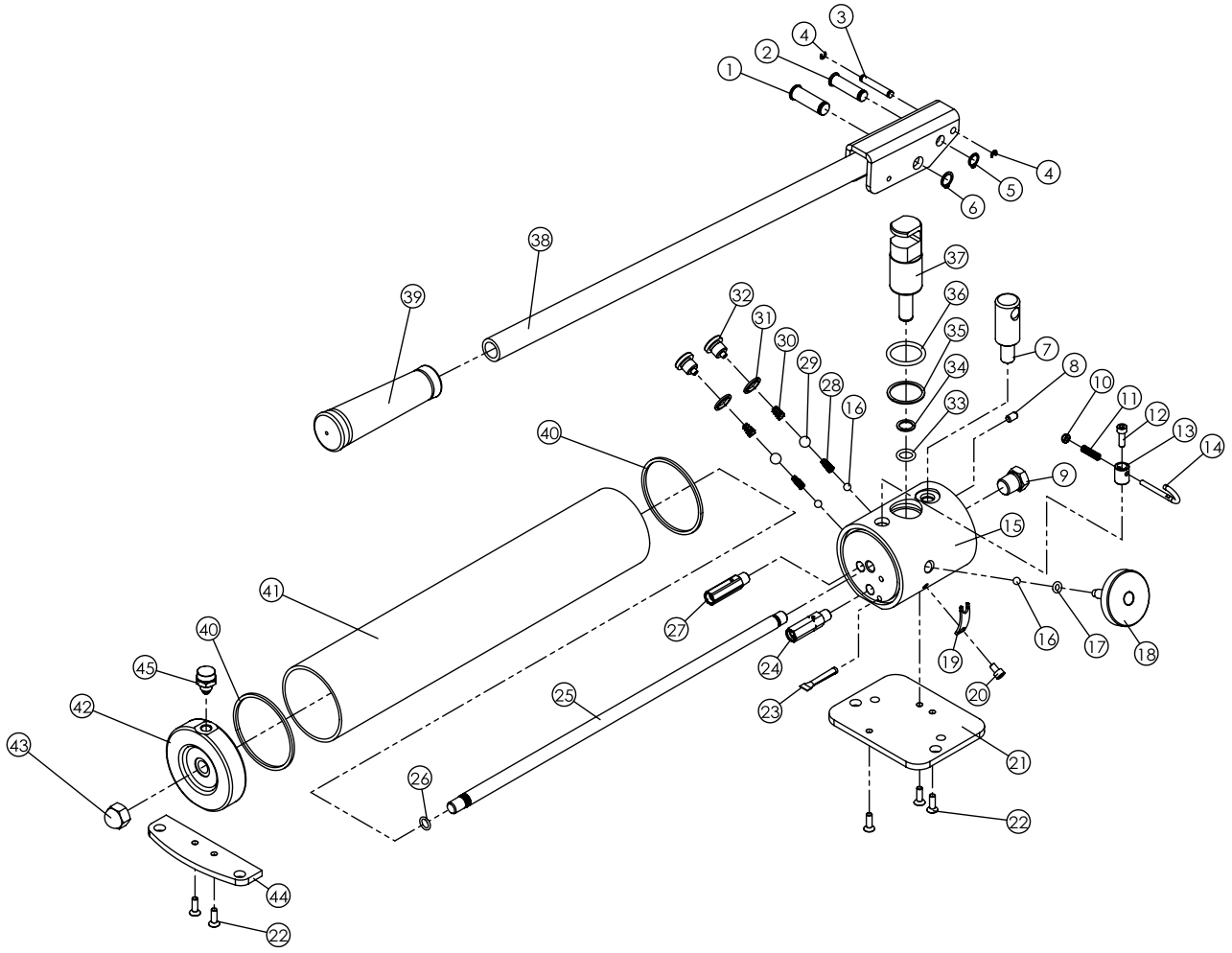

Note: To ensure safe and reliable performance, replace worn or damaged parts with BVA Hydraulics Authorized Replacement Parts only.

Hand Pump Service Parts

MODEL: P1000

SFA Companies 10939 N. Pomona Ave. Kansas City, MO 64153
Tel: 888-332-6419 * Fax: 816-448-2142
E-mail: sales@bvahydraulics.com Website: www.bvahydraulics.com

Note: Not all components of the pump are replacement items, but are illustrated as a convenient reference of location and position in the assembly sequence.

Parts List

Item	Part Number	Description	Qty
1	H18-6-1317-108	Pin	1
2	H18-6-1318-100	Pin	1
3	H18-5-1318-104	Pin	1
4	677-5-0040-102	E-clip	2
5	667-5-0100-005	C-clip	1
6	667-5-0120-001	C-clip	1
7	H18-6-2114-200	Fixing pillar	1
8	644-1-0060-071	Screw	1
9	D05-6-1001-106	Nut	1
10	661-2-0040-012	Anti-loosen Nut	1
11	512-2-0060-016	Compressing Spring	1
12	649-1-0050-037	Screw	1
13	H18-6-1322-101	Washer base	1
14	H18-6-1321-200	Hook	1
15	N/A	Base	1
16	601-7-0008-009	Steel ball	3
17	*	O-ring	1
18	H18-4-1603-107	Release valve	1
19	H18-6-1308-107	Iron plate	1
20	649-1-0050-028	Screw	1
21	H18-5-1602-101	Base Plate	1
22	651-1-0050-103	Screw	5
23	532-8-0050-024	Filter	1

Item	Part Number	Description	Qty
24	H18-4-1901-105	High pressure Valve Ass.	1
25	H18-5-4401-207	Screw Bar	1
26	*	O-ring	1
27	H18-4-1902-208	Low pressure valve ass.	1
28	552-2-0061-102	Bevel compressing spring	2
29	601-7-0012-000	Steel ball	2
30	552-2-0080-106	Bevel compressing spring	2
31	*	Special Washer	2
32	H18-6-1215-100	Nut	2
33	*	O-ring	1
34	*	Back-up Ring	1
35	*	Back-up Ring	1
36	*	O-ring	1
37	H28-4-4406-108	Piston Ass.	1
38	H18-3-2100-100	Handle	1
39	H18-6-2112-105	Handle Grip	1
40	*	Washer	2
41	H18-6-1911-100	Tube	1
42	H18-6-2122-105	Gable	1
43	671-2-0100-205	Nut	1
44	H18-5-1502-208	Support Plate	1
45	H18-4-1905-103	Air Vent Assy	1
(*)	H18-3-9902-101	Repair Kit	1

(*) - Indicates items included in, and available only as part of Seal Kit. Seal Kits require special skill, training and equipment to repair. Installation must be done by Authorized Service Center. Contact BVA for list of Authorized Service Centers.

N/A - Part is not available as replacement.

Hand Pump Service Parts

MODEL: P1000AD

SFA Companies 10939 N. Pomona Ave. Kansas City, MO 64153
Tel: 888-332-6419 * Fax: 816-448-2142
E-mail: sales@bvahydraulics.com Website: www.bvahydraulics.com

Note: Not all components of the pump are replacement items, but are illustrated as a convenient reference of location and position in the assembly sequence.

Parts Illustration

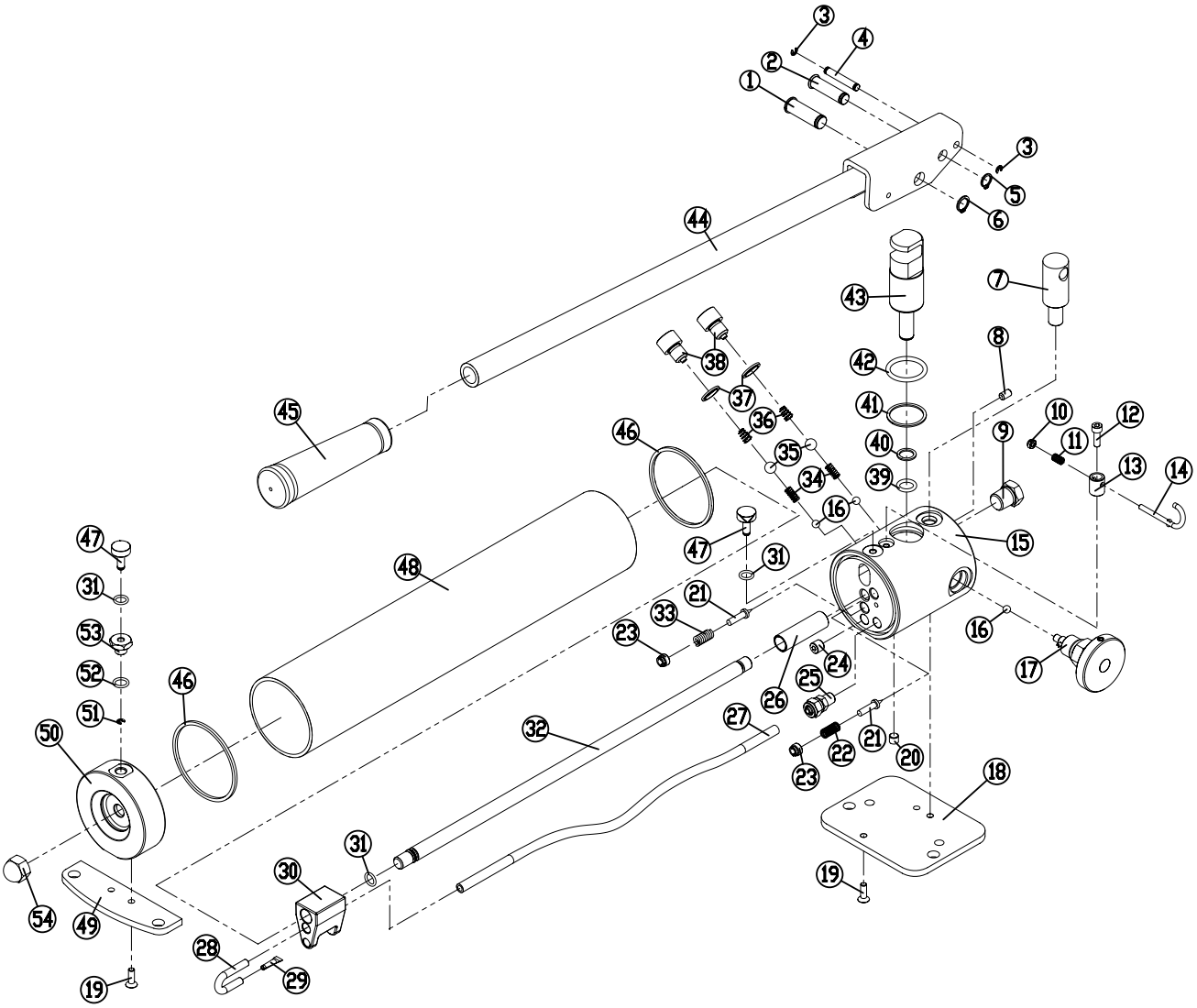

Note: To ensure safe and reliable performance, replace worn or damaged parts with BVA Hydraulics Authorized Replacement Parts only.

Hand Pump Service Parts

MODEL: P1000AD

SFA Companies 10939 N. Pomona Ave. Kansas City, MO 64153
Tel: 888-332-6419 * Fax: 816-448-2142
E-mail: sales@bvahydraulics.com Website: www.bvahydraulics.com

Note: Not all components of the pump are replacement items, but are illustrated as a convenient reference of location and position in the assembly sequence.

Parts List

Item	Part Number	Description	Qty
1	H18-6-1317-108	Pin	1
2	H18-6-1318-100	Pin	1
3	677-5-0040-102	E-Clip	2
4	H18-5-1318-104	Pin	1
5	667-5-0100-005	C-Clip	1
6	667-5-0120-001	C-Clip	1
7	H18-6-2114-200	Fixing pillar	1
8	644-1-0060-071	Screw	1
9	D05-6-1001-106	Plug	1
10	661-2-0040-012	Lock Nut	1
11	512-2-0060-016	Compression Spring	1
12	649-1-0050-037	Screw	1
13	H18-6-1322-101	Washer base	1
14	H18-6-1321-200	Hook	1
15	N/A	Base	1
16	601-7-0008-009	Steel Ball	3
17	H28-4-1700-105	Release Valve Assy.	1
18	H18-5-1602-101	Base Plate	1
19	651-1-0050-103	Screw	5
20	609-1-0075-105	Plug	1
21	A17-6-1216-102	Nail	2
22	512-2-0080-306	Compression Spring	1
23	A17-5-1603-300	Adjusting Screw	2
24	641-1-0098-103	Screw	1
25	651-7-0004-107	Adapter	1
26	H18-6-1908-101	Steel Tube	1
27	H18-6-1910-108	Silicon Tube	1

Item	Part Number	Description	Qty
28	H18-6-1909-103	Suction Tube	1
29	532-8-0040-012	Filter	1
30	H18-6-1907-109	Silicon Tube Seat	1
31	*	O-Ring	3
32	H18-5-4401-207	Screw Bar	1
33	512-2-0067-010	Compression Spring	1
34	512-2-0063-104	Compression Spring	2
35	601-7-0012-000	Steel Ball	2
36	552-2-0080-106	Bevel Compression Spring	2
37	*	Special Washer	2
38	A16-6-5006-104	Screw	2
39	*	O-Ring	1
40	*	Back-up Ring	1
41	*	Back-up Ring	1
42	*	O-Ring	1
43	H28-4-4406-108	Piston Assembly	1
44	H18-3-2100-100	Handle	1
45	H18-6-2112-105	Handle Grip	1
46	*	Packing	2
47	H18-6-1906-107	Air Vent	2
48	H18-6-1911-100	Reservoir	1
49	H18-5-1502-208	Gable Plate	1
50	H18-6-1904-103	Gable	1
51	677-5-0030-109	E-Clip	1
52	*	O-Ring	1
53	H18-6-1905-105	Air Vent Seat	1
54	671-2-0100-205	Nut	1
(*)	H18-3-9918-106	Seal Kit	

(*) - Indicates items included in, and available only as part of Seal Kit. Seal Kits require special skill, training and equipment to repair. Installation must be done by Authorized Service Center. Contact BVA for list of Authorized Service Centers.

N/A - Part is not available as replacement.

Hand Pump Service Parts

MODEL: P2001

SFA Companies 10939 N. Pomona Ave. Kansas City, MO 64153
Tel: 888-332-6419 * Fax: 816-448-2142
E-mail: sales@bvahydraulics.com Website: www.bvahydraulics.com

Note: Not all components of the pump are replacement items, but are illustrated as a convenient reference of location and position in the assembly sequence.

Parts Illustration

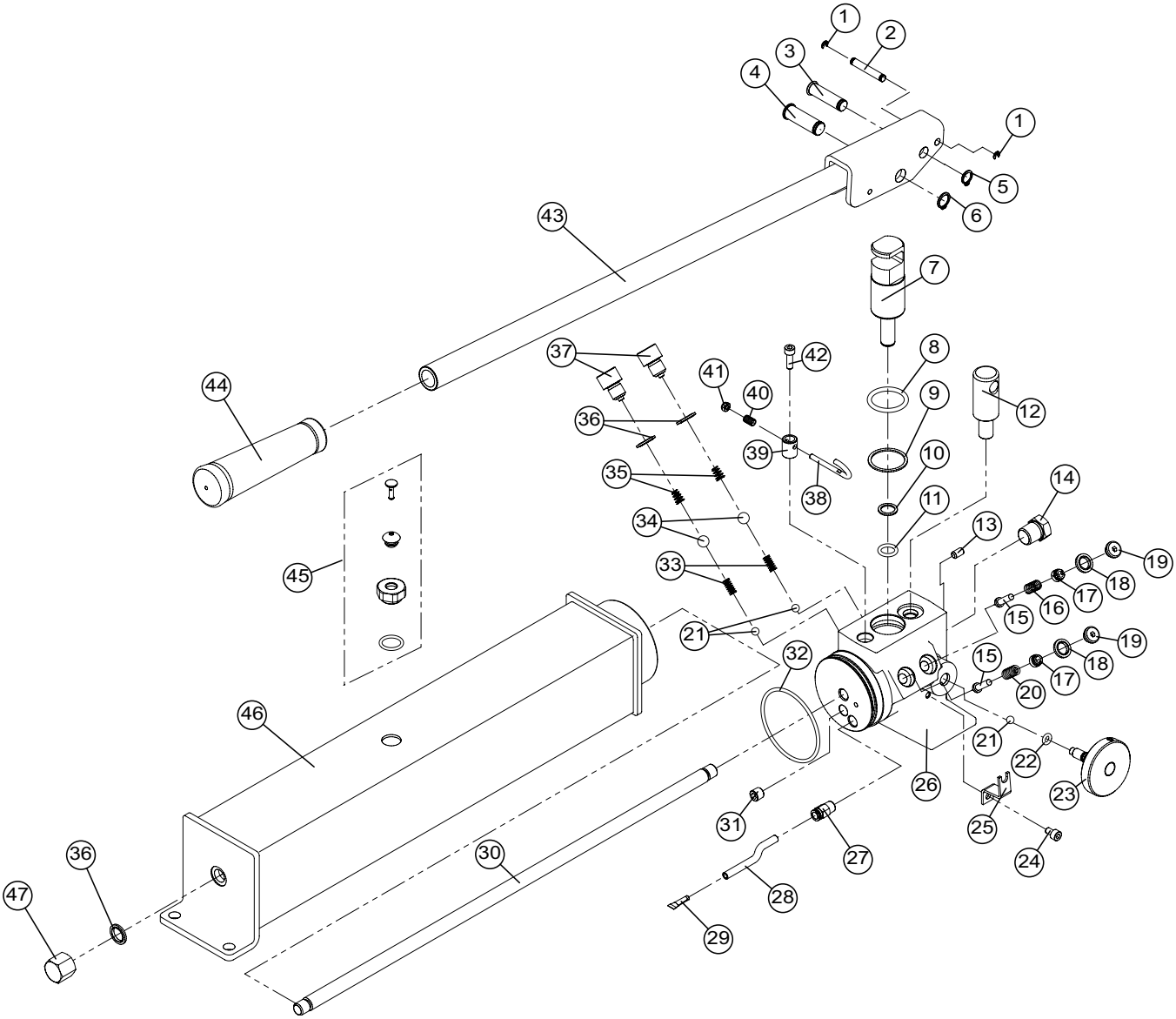

Note: To ensure safe and reliable performance, replace worn or damaged parts with BVA Hydraulics Authorized Replacement Parts only.

Hand Pump Service Parts

MODEL: P2001

SFA Companies 10939 N. Pomona Ave. Kansas City, MO 64153
Tel: 888-332-6419 * Fax: 816-448-2142
E-mail: sales@bvahydraulics.com Website: www.bvahydraulics.com

Note: Not all components of the pump are replacement items, but are illustrated as a convenient reference of location and position in the assembly sequence.

Parts List

Item	Part Number	Description	Qty
1	677-5-0040-102	E-Clip	2
2	H18-5-1318-104	Pin	1
3	H18-6-1318-100	Pin	1
4	H18-6-1317-108	Piston Pin	1
5	667-5-0100-005	C-Clip	1
6	667-5-0120-001	C-Clip	1
7	H28-4-4406-108	Piston Assy	1
8	*	O-Ring	1
9	*	Back-up Ring	1
10	*	Back-up Ring	1
11	*	O-Ring	1
12	H18-6-2114-200	Fixing Pillar	1
13	644-1-0060-071	Screw	1
14	D05-6-1001-106	Nut	1
15	A17-6-1216-102	Needle Valve	2
16	512-2-0080-306	Compression Spring	1
17	A17-5-1603-300	Adjust Nut	2
18	*	Special Washer	2
19	414-6-1215-509	Nut	2
20	512-2-0067-010	Compression Spring	1
21	601-7-0008-009	Steel Ball	3
22	*	O-Ring	1
23	H18-4-1603-107	Release Valve Assy	1
24	649-1-0050-028	Screw	1
25	H53-6-1302-102	Valve Stop	2
26	N/A	Base	1

Item	Part Number	Description	Qty
27	651-7-0063-007	Adapter	1
28	H53-5-1808-104	Oil Tube	1
29	532-8-0040-012	Filter	1
30	H53-6-1814-109	Steel Bar	1
31	641-1-0098-103	Screw	1
32	*	O-Ring	1
33	512-2-0063-104	Compression Spring	2
34	601-7-0012-000	Steel Ball	2
35	552-2-0080-106	Compression Spring	2
36	*	Special Washer	3
37	A16-6-5006-104	Screw	2
38	H18-6-1321-200	Handle Pin	1
39	H18-6-1322-101	Handle Pin Post	1
40	512-2-0060-016	Compression Spring	1
41	661-2-0040-012	Lock Nut	1
42	649-1-0050-037	Screw	1
43	H28-3-2118-107	Handle	1
44	H18-6-2112-105	Handle Grip	1
45	A57-4-1900-105	Air Vent Assembly	1
46	H53-3-1803-308	Reservoir	1
47	H28-6-4404-106	Nut	1
(*)	H53-3-9905-104	Seal Kit	1

(*) - Indicates items included in, and available only as part of Seal Kit. Seal Kits require special skill, training and equipment to repair. Installation must be done by Authorized Service Center. Contact BVA for list of Authorized Service Centers.

N/A - Part is not available as replacement.

LIMITED LIFETIME WARRANTY

BVA Hydraulics®, represented in the United States by SFA Companies ["SFA"] warrants this product to be free from defects in material and workmanship for the life of the product as long as the original purchaser owns the product. The warranty is non-transferable and is subject to the terms, exclusions, and limitations described below:

- Damaged components, including but not limited to bent rams, dented or crushed cylinder walls, broken welds or couplers as well as worn out seals, o-rings and springs are the result of misuse and not covered by warranty and BVA Hydraulics will not provide any warranty credit for such damaged components.
- This warranty does not cover ordinary wear and tear, overloading, alterations (including repairs or attempted repairs not performed by BVA Hydraulics or one of its authorized personnel), improper fluid use, or use of the product in any manner for which the product was not intended or the use of which is not in accordance with the instructions or warnings provided with the product.
- In the unlikely event that a BVA Hydraulics product fails due to material defect in workmanship, you may contact SFA for disposition. In such cases, the customer's sole and exclusive remedy for any breach or alleged breach of warranty is limited to the repair or replacement of the defective product.
- Under no circumstances is BVA Hydraulics liable for any consequential or incidental damage or loss whatsoever.
- THIS WARRANTY IS LIMITED TO NEW PRODUCTS SOLD THROUGH AUTHORIZED DISTRIBUTORS AND OTHER CHANNELS DESIGNATED BY BVA HYDRAULICS. NO AGENT, EMPLOYEE OR OTHER REPRESENTATIVE OF BVA HYDRAULICS IS AUTHORIZED TO MODIFY THIS WARRANTY.
- THE FOREGOING IS EXCLUSIVE AND IS IN LIEU OF ALL OTHER EXPRESS AND IMPLIED WARRANTIES, INCLUDING BUT NOT LIMITED TO THE IMPLIED WARRANTIES OF MERCHANTABILITY AND FOR A FITNESS FOR A PARTICULAR PURPOSE.
- Components not manufactured by BVA Hydraulics including certain motor systems, gasoline engines, and others are not covered by this warranty and instead are covered by the manufacturer's separate manufacturer's warranty provided in the package.
- BVA Hydraulics' liability in all cases is limited to, and will not exceed the purchase price paid for the product.

SFA Companies
10939 N. Pomona Ave. Kansas City, MO 64153
Tel: 888-332-6419
E-mail: sales@bvahydraulics.com